This book describes the Fabry-Perot interferometer and its variants, as well as its use, optimization and applications.

The author begins with an historical perspective on the development of the instrument. Because of the quantitative uses of the device, the text tends to be mostly mathematical in its treatment. However, there is also much practical detail on the use and optimization of the Fabry-Perot, and discussion of its classical uses (such as in metrology) and its contemporary applications (such as lasers). In addition, the book contains a comprehensive bibliography summarizing the extensive literature on the subject.

The book will appeal to high-resolution practitioners, such as spectroscopists; to the natural-science disciplines, such as physics and chemistry; to the astronomical, planetary and space sciences, where the high-resolution high-luminosity properties of the Fabry-Perot are of benefit; and to the laser community, since the Fabry-Perot is not only an essential entity of the laser, but it is also used to characterize the optical and spectroscopic behavior of the laser.

Cambridge Studies in Modern Optics

Editors
P.L. Knight *Optics Section, Imperial College of Science & Technology*
S.D. Smith FRS *Department of Physics, Heriot-Watt University*

Cambridge Studies in Modern Optics is an international series which contains books on all aspects of theoretical and applied modern optics. Topics falling within the scope of the series include laser dynamics, quantum and nonlinear optics, optical bistability, photon statistics, optical image processing, laser speckle, laser spectroscopy, fibre optics, astronomical optics, lens design etc. Books in the series are intended to range in level from advanced textbooks suitable for final-year undergraduates and beginning graduate students through to monographs dealing with very specialised subjects in the field. The books will also interest scientists and engineers working on the applications of optics in industry.

1. W.H. Steel Interferometry (Second Edition)
2. P. Hariharan Optical Holography. Principles, Techniques and Applications
3. G. Hernandez Fabry-Perot Interferometers
4. R.W. Boyd, M.G. Raymer and L.M. Narducci (eds) Optical Instabilities

Cambridge University Press ISBN 0-521-32238-3

3 HERNANDEZ Fabry-Perot Interferometers

FL
NCAR LIBRARY
QC
411
H47
1986

Cambridge Studies in Modern Optics 3

Fabry-Perot Interferometers

G. HERNANDEZ

NCAR Library
50583000033955
Hernandez, Guillermo Fabry-Perot interferometers
QC411 .H47 1986 c.1 ML 1986

Clarke and Rosenberg (1982) cover the millimeter, microwave and infrared regions.

FIGURE 1.2. A. Perot (1863-1925).

Chapter 2

Mathematical development

1. Ideal interferometer

In this section the inherent behavior and properties of a Fabry-Perot will be reviewed in the ideal classical sense, i.e., where the effects of the limited size of the mirrors, diffraction effects, etc. are considered to be negligible. By taking this (arbitrary) approach, it is possible to consider the main properties of the device in an ideal sense and, then later, to treat the practical limitations as corrections of the idealized picture.

Although almost every book on optical interference phenomena (Fabry, 1923; Born and Wolf, 1964; Steel, 1967 ; Cook, 1971) shows the basic behavior of the multiple interference device known as the Fabry-Perot interferometer, it will be repeated here for the sake of completeness and notation. This ray-path approach is suitable for the conventional Fabry-Perot, where diffraction effects are negligible. Diffraction, and its effects, is discussed in Chapter 6, Section 4.

Consider a plane-parallel slab of refractive index μ with surfaces that partly reflect and partly transmit light, and upon which a plane wave of monochromatic radiation is incident at an angle Θ to the normal as indicated in Figure 2.1. At the first surface, the wave is divided into two plane waves, one reflected, as indicated by the dashed line leading to a , and the other transmitted, and the division process of the wave remaining inside the slab continues as shown in the figure. The phase lag,

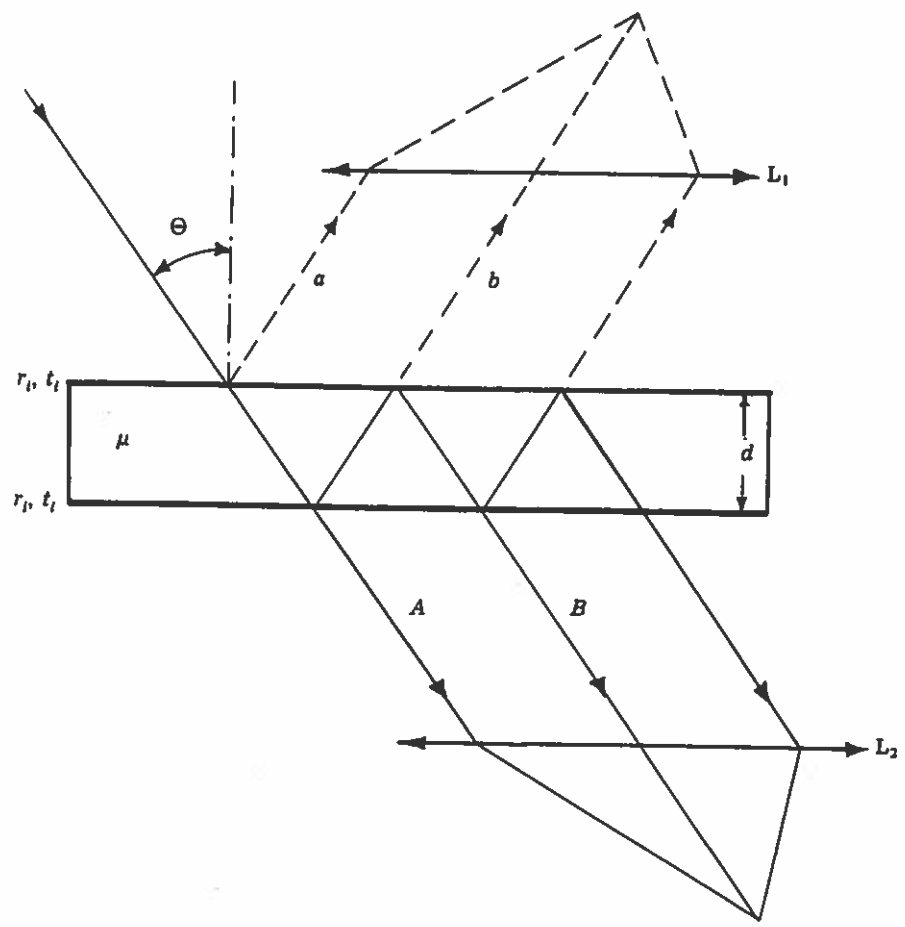

FIGURE 2.1. Multiple-beam interference in a Fabry-Perot etalon.

Φ , between two emerging waves, say, A and B, or a and b, in the figure is given by:

$$\Phi = 4\pi\,\nu\mu\,d\,c^{-1}\cos\Theta\ , \qquad 2.1.1a$$

$$\Phi = 2\pi\,\nu t\,\cos\Theta\ . \qquad 2.1.1b$$

In the above equations ν is the frequency of the radiation in vacuum, μ the index of refraction of the slab, d is the thickness of the same, c is the speed of light, and t is the transit time for each double passage normal to the surfaces, i.e., $t = 2\,\mu\,d c^{-1}$ (Steel, 1967). Consider each reflective surface to be described by its complex

reflection and transmission amplitude coefficients r_i and t_i. r_1 (t_1) is defined to be the reflection (transmission) coefficient for a wave traveling from the surrounding medium towards the slab, while r_2 (t_2) applies to a wave traveling from the slab towards the surrounding medium. For a unit amplitude incident wave the amplitude of the successive waves reflected from the plate is :

$$r_1\ ,\ t_1^2 r_2 e^{i\Phi}\ ,\ t_1^2 r_2^3 e^{2i\Phi}\ ,\ \ldots\ldots\ldots\ . \qquad 2.1.2$$

The transmitted amplitudes are given by:

$$t_1 t_2\ ,\ t_1 t_2 r_2^2 e^{i\Phi}\ ,\ t_1 t_2 r_2^4 e^{2i\Phi}\ ,\ \ldots\ldots\ . \qquad 2.1.3$$

When the rays are brought to focus, by lenses L_1 and L_2 of Figure 2.1, the total reflected and transmitted amplitudes are then the sum of the amplitudes given in Equations 2.1.2) and 2.1.3) , i.e,

$$A_r(\Phi) = r_1 + t_1^2 r_2 e^{i\Phi} + \cdots$$

$$= \left[\left(1-e^{i\Phi}(R+r)\right) R^{1/2}\right]\left(1-Re^{i\Phi}\right)^{-1}\ , \qquad 2.1.4$$

$$A_t(\Phi) = t_1 t_2 + t_1 t_2 r_2^2 e^{i\Phi} + \cdots = \tau\left(1-\mathrm{R}e^{i\Phi}\right)^{-1}\ , \qquad 2.1.5$$

where the r and t subscripts indicate reflection or transmission. In the above, use has been made of the following relations (Born and Wolf, 1964):

$$t_1 t_2 = \tau\ ,$$

$$r_1 = -r_2\ ,$$

$$r_1^2 = r_2^2 = R\ ,$$

$$\delta = \Phi + 2\chi\ ,$$

where χ represents the phase changes upon reflection on each of the surfaces, e.g., the sum of the arguments of the complex amplitude reflections. The resultant reflected and transmitted intensities are then given by the product of the amplitude and its complex conjugate:

$$Y_r(\delta) = A_r(\delta)\,A_r^*(\delta)$$

$$= \left[1-2(R+\tau)\cos\delta+(R+\tau)^2\right]\left[1+R^2-2R\cos\delta\right]^{-1}\ , \qquad 2.1.6a$$

$$Y_t(\delta) = A_t(\delta)\,A_t^*(\delta)$$

$$= \tau^2\left[1+R^2-2R\cos\delta\right]^{-1}\ . \qquad 2.1.7a$$

Note that the above functions can be expressed in terms of the absorption/scattering coefficient A , since $R + \tau + A = 1$, and the results are given by :

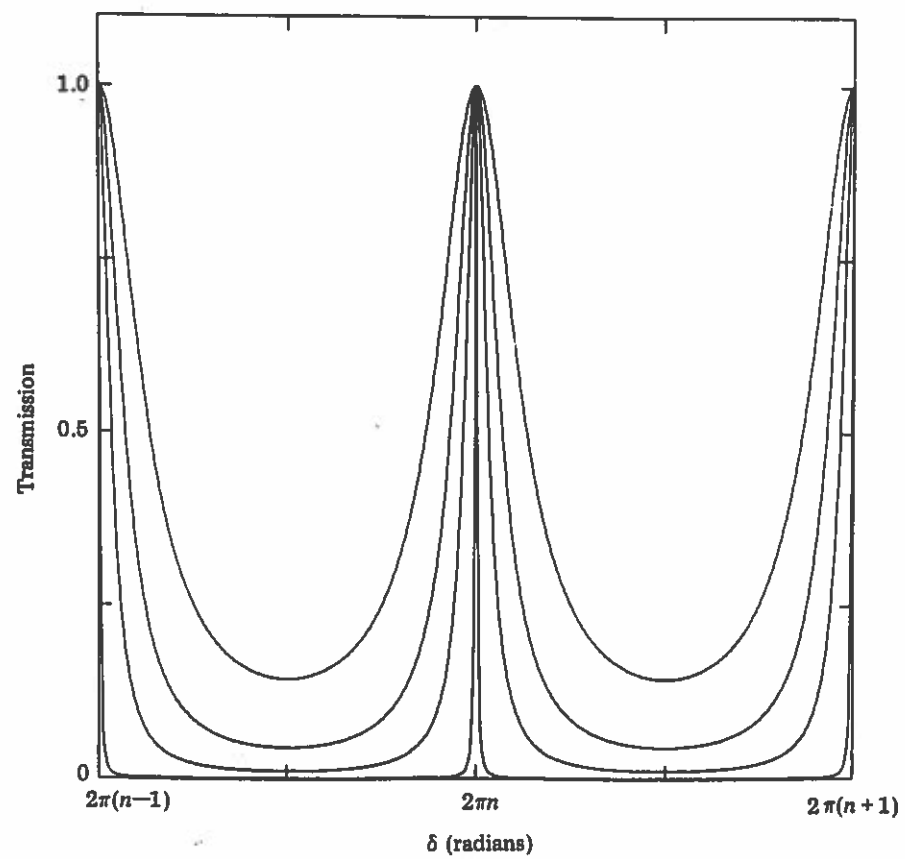

FIGURE 2.2. Transmitted radiation of a Fabry-Perot etalon as a function of the phase retardation of the beams for various reflectivities. The values of the latter are: 0.98, 0.81, 0.65 and 0.45 for the narrowest to the widest profile.

$$Y_r(\delta) = R\left[1+(1-A)^2-2(1-A)\cos\delta\right]\left[1+R^2-2R\cos\delta\right]^{-1}, \qquad 2.1.6b$$

$$Y_t(\delta) = [1-A(1-R)^{-1}]^2(1-R)^2\left(1+R^2-2R\cos\delta\right)^{-1}. \qquad 2.1.7b$$

This last equation is often found described by its equivalent formulations:

$$Y_t(\delta) = [1-A(1-R)^{-1}]^2(1-R)(1+R)^{-1}\left(1+2\sum_{m=1}^{m=\infty}R^m\cos(m\delta)\right), \qquad 2.1.7c$$

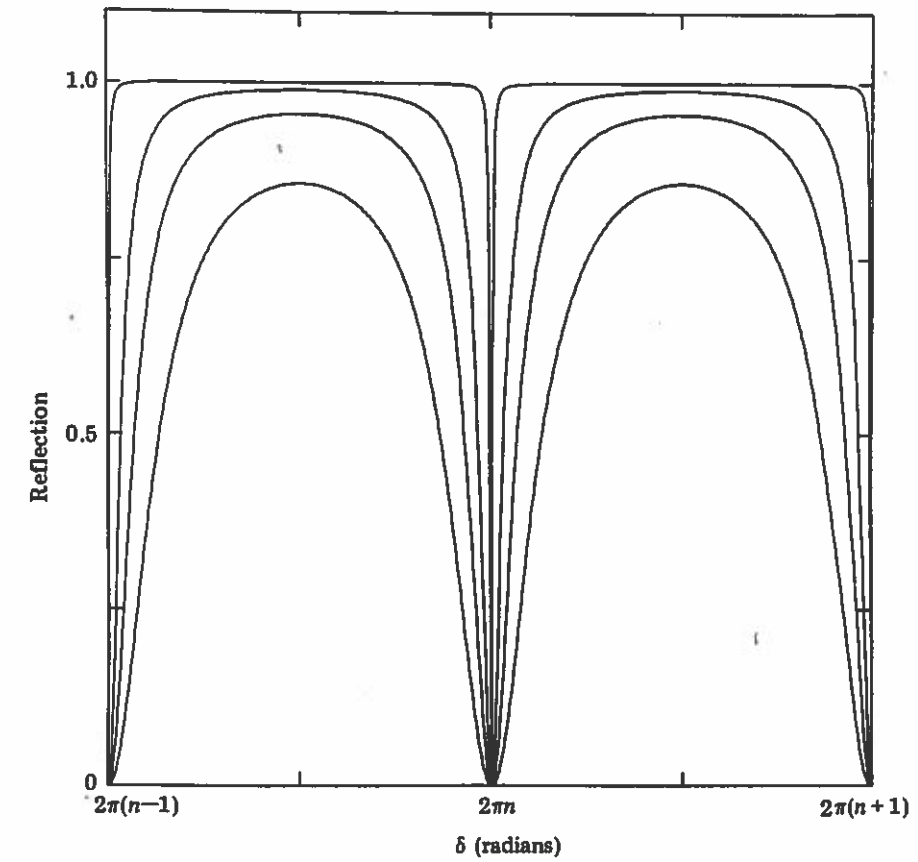

FIGURE 2.3. Reflected radiation of a Fabry-Perot etalon as a function of the phase retardation of the beams. Same reflectivities as Figure 2.2.

$$Y_t(\delta) = [1-A(1-R)^{-1}]^2\left[1+4R(1-R)^{-2}\sin^2\frac{\delta}{2}\right]^{-1}, \qquad 2.1.7d$$

$$Y_t(\delta) = [1-A(1-R)^{-1}]^2(1-R)(1+R)^{-1}2\ln(R^{-1})$$
$$\times \sum_{n=-\infty}^{n=\infty}\left\{[\ln(R)^{-1}]^2+(\delta-2\pi n)^2\right\}^{-1}. \qquad 2.1.7e$$

The last term of this Equation shows the transmission intensity to be composed of the sum of dispersion, or Lorentzian, profiles of width $l = \ln(R^{-1})$ and transmission

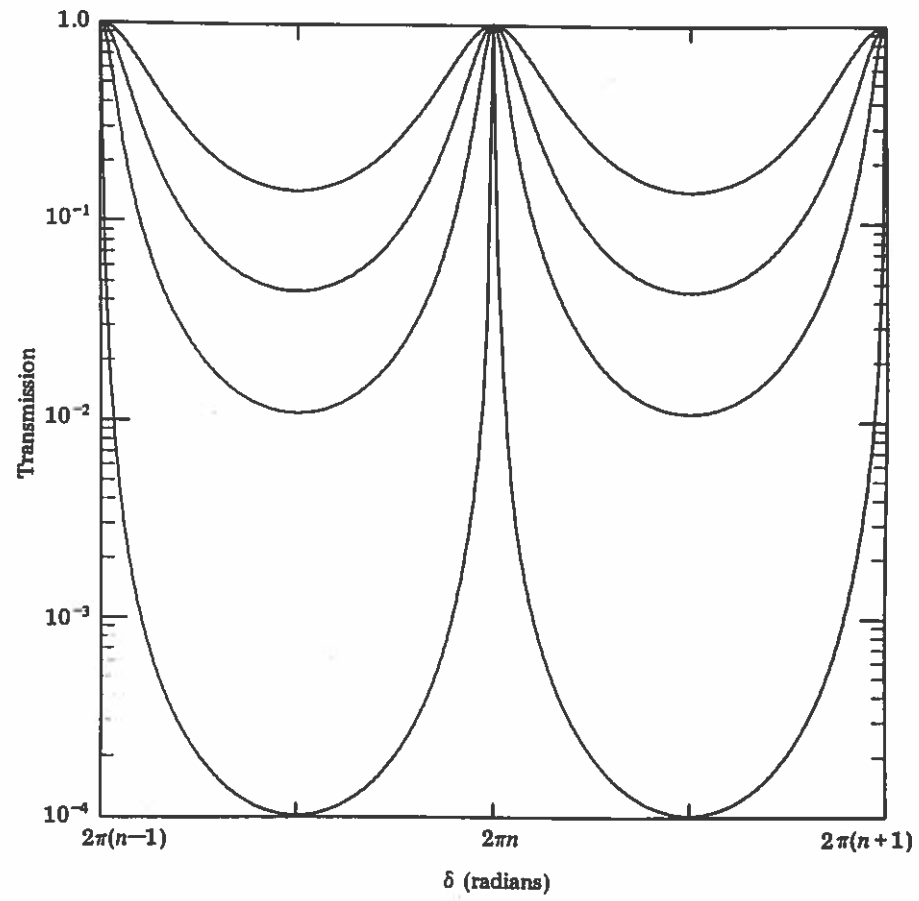

FIGURE 2.4. Transmitted radiation of a Fabry-Perot etalon as a function of the phase retardation of the beams. This is the same data as in Figure 2.2, except it is shown in logarithmic scale.

less than unity.

For the case when $A = 0$, the sum of Equations 2.1.6b) and 2.1.7b), or their variants, is equal to unity; that is, the incoming wave energy has been conserved. The behavior of the Fabry-Perot etalon as a function of the reflectivity R is shown in Figures 2.2, 2.3 and 2.4. Note in particular the increase in instrumental resolution, or ability to separate closely spaced lines, as the reflectivity increases. In this example the absorptivity/scattering coefficient A has been set to zero.

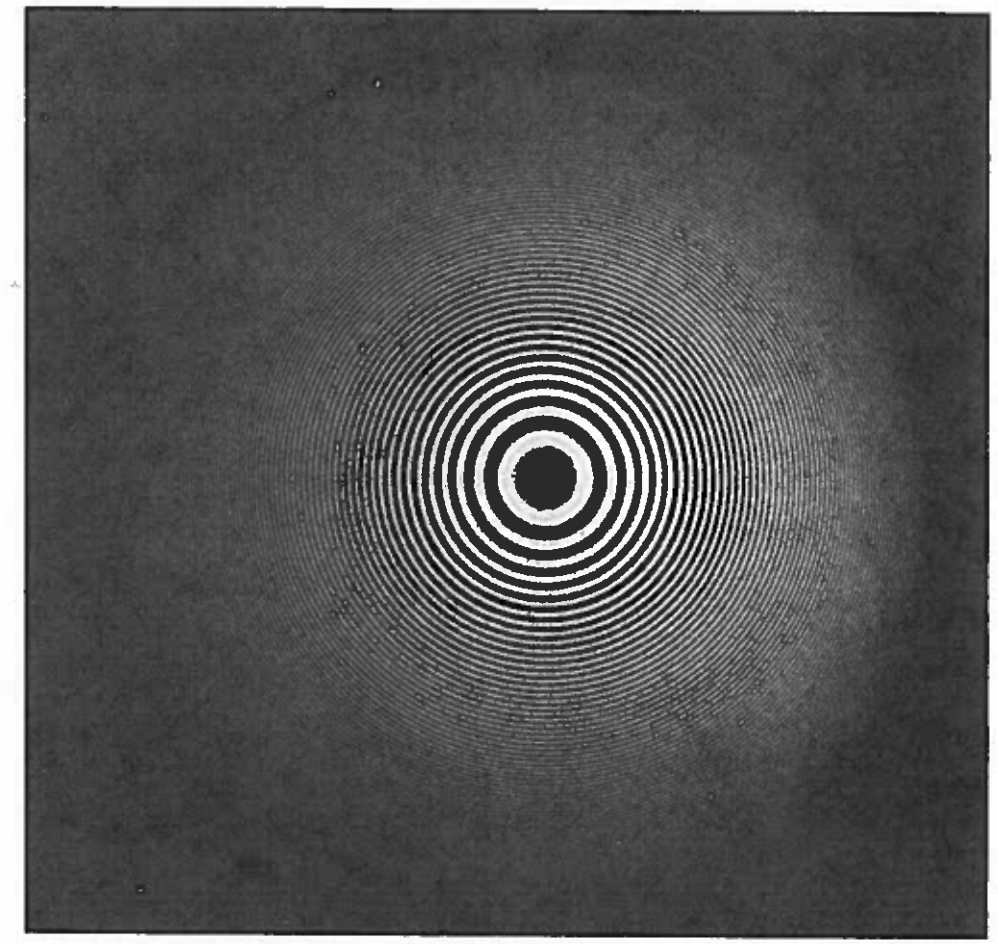

FIGURE 2.5. Transmitted radiation of a Fabry-Perot etalon. Mercury discharge lamp source, 1.5 cm spacer etalon with 0.85 reflectivity.

Consider many plane waves of equal intensity, incident over a range of angles to the etalon of Figure 2.1, where the resultant reflected and transmitted beams are collected by two separate lenses and thus made to interfere, as given in the figure. The following results are then observed. For the transmission case it is found that there exist maxima of intensity, or constructive interference, when δ has integral values of 2π; that is, when the order of interference, n, as defined below, has integer values:

$$n = \delta(2\pi)^{-1} = 2\mu d\sigma \cos\Theta \ . \qquad 2.1.8$$

In the above equation, σ is defined as $\sigma = \nu c^{-1} = \lambda^{-1}$, or the inverse wavelength

in vacuum, which will be called wavenumber, as is usual in spectroscopic notation. The wavenumber unit adopted here is the Kayser (K) = cm^{-1}. However, note that Kayser in his tables (1925) used m^{-1}. Minima, or destructive interference, will be found when n has half-integral values. As can be seen in Figure 2.5, because of the circular symmetry of the device, the resultant pattern is a set of bright circular concentric rings, or fringes, on a dark background. For the reflected radiation, the resultant is found to be the complement of the transmitted case, i.e., a bright field crossed by narrow dark fringes. The orders of interference are, in the reflection case, equal to integer values for the dark fringes and one-half integers for the maxima. For simplicity, the central or operating order, of interference for transmitted radiation is defined as that occurring perpendicular to the reflecting surfaces:

$$n_0 = 2\,\mu\,\sigma\,d\ . \qquad 2.1.9$$

The set of observed fringes shows the fundamental periodic behavior of the Fabry-Perot interferometer, namely, a single wavenumber appears a multiple number of times at specific angles given by Equation 2.1.8). These angles are a function of the wavenumber (inverse wavelength) and the optical spacer μd. The distance between the mth and the $(m^{th}+1)$ order can be considered in terms of a change in wavenumber of the radiation, or a change in the optical spacing. If this optical spacing is fixed, the necessary change in wavenumber to vary the order by one unit, say from m to $(m+1)$, is called the free spectral range, $\Delta\sigma$, and which is defined by:

$$\Delta\sigma = (2\mu d)^{-1} = \frac{\sigma}{n_0}\ . \qquad 2.1.10a.$$

The name free spectral range arises from the early use of this instrument to resolve fine structure components in spectra. Imagine two superimposed, equal-intensity, monochromatic lines whose wavenumber separation can slowly be changed by shifting the wavenumber of one of the lines while the other is held constant. Eventually the separation between the two lines will be apparent as two sets of maxima in the Fabry-Perot transmitted radiation. However, as this separation is further increased, the second maxima will blend and disappear into the next maxima of the original unchanged wavenumber line, and eventually reappear at the other side. When the two lines blend exactly, it is then said there has occurred an overlap of orders and the true separation in wavenumber between the two lines is ambiguous by one order, and in the general case, by any number of orders. Indeed, it is not possible to say that there exist two lines in the transmitted pattern unless a separate measurement is made. As the previous example demonstrates, the separation between two lines is free of ambiguity over the wavenumber spectral range defined by one order, thus the name free spectral range.

Again referring to Equation 2.1.8), for a fixed wavenumber σ, a change in the optical spacing, μd, forces the wavenumber to appear at any arbitrary angle Θ,

actually a set of Θs. This change can be accomplished by either changing the value of d, i.e., physical spacing, or the value of the index of refraction μ. In the latter case, it is perhaps more correct to say that the effective wavenumber $\mu\sigma$ has been changed by varying μ. To avoid this slight ambiguity, the nominal free spectral range is defined in vacuum, i.e., $\mu \equiv 1$, or:

$$\Delta\sigma = (2d)^{-1}\ . \qquad 2.1.10b$$

As seen earlier in Figure 2.2, the width of the bright fringes observed in transmission (and their complementary reflection dark fringes) is governed by the value of R in Equations 2.1.6b) and 2.1.7b), and for $R \leqslant 1$, their width is finite and given, as a half-width at half-height (HWHH), by:

$$a = 2\sin^{-1}\left[\,(1-R)(2R^{1/2})^{-1}\,\right]\ . \qquad 2.1.11a$$

The above can be approximated for small values of the argument of the inverse sine, i.e., R near unity, by:

$$a \approx (1-R)R^{-1/2}\ . \qquad 2.1.11b$$

The correct expression given in Equation 2.1.11a) is not defined for values of R less than ($3 - 8^{1/2}$). The above definitions of a are given for the 2π periodicity of the etalon, and in order to allow for changes in scale, the normalized HWHH is defined as the ratio of the width to the period, namely:

$$a^{*} = a\,(2\pi)^{-1} = \pi^{-1}\sin^{-1}\left[\,(1-R)(2R^{1/2})^{-1}\,\right]\ . \qquad 2.1.12a$$

In the text that follows, normalized widths will be used unless otherwise specified. For the sake of completeness, the normalized HWHH, l^{*}, of the individual Lorentz profiles in the sum of Equation 2.1.7e) is related to the normalized HWHH a^{*} of Equation 2.1.12a) by:

$$\sin(\pi\,a^{*}) = \sinh(\pi\,l^{*})\ . \qquad 2.1.12b$$

The inverse of Equation 2.1.12a) is normally called the reflective finesse, N_R, of the etalon (Chabbal, 1953):

$$N_R = (2a^{*})^{-1} = \pi\left\{2\sin^{-1}\left[\,(1-R)(2R^{1/2})^{-1}\,\right]\right\}^{-1}\ , \qquad 2.1.13a$$

$$N_R \approx \pi\,R^{1/2}(1-R)^{-1}\ . \qquad 2.1.13b$$

The $4R(1-R)^{-2}$ term in Equation 2.1.7d) is called here the **F** parameter, rather than the coefficient of reflective finesse, in order to avoid confusion with the finesse N_R of Equation 2.1.13). In terms of the (approximate) finesse, defined above, this **F** parameter can be described by:

$$\mathbf{F} = 4R(1-R)^{-2} = (2\,N_R\,\pi^{-1})^2 = 4\,a^{-2} = (\pi\,a^{*})^{-2}\,. \qquad 2.1.13c$$

Equations 2.1.12a) and 2.1.13a) show that the normalized width, and thus the reflective finesse, depend only on the reflectivity R, and therefore both are constants of the instrument. The width of the fringes decreases as R approaches the limiting value of unity, at which point the fringes become a Dirac comb, a result which will be used later. In the absence of absorption and/or scattering, i.e., $R + r = 1$, inspection of Equations 2.1.7a), 2.1.7b), 2.1.7c), 2.1.7d), and 2.1.7e) reveals that the transmission at the maximum of the fringes is equal to unity, while the minimum value is given by $(1-R)^2(1+R)^{-2}$. This result indicates there exists a finite leakage of the line emission near and at the minimum. A quantitative expression of this effect is given by the contrast, **C**:

$$\mathbf{C} = Y_t(\delta)_{\max}\left[Y_t(\delta)_{\min}\right]^{-1} = (1+R)^2(1-R)^{-2} \simeq 1 + (2N_R\,\pi^{-1})^2\,, \qquad 2.1.14$$

where N_R is the approximate finesse given in Equation 2.1.13b). The contrast can be interpreted as a measure of the ability of a Fabry-Perot interferometer to differentiate between a strong and a weak line in the same spectrum. Figure 2.6 shows the contrast effects for a transmission Fabry-Perot. In the figure, two emission lines are given where the weaker of the two lines has been arbitrarily set to be 1/100 of the stronger one. Note both the decrease of line leakage at the minimum and the ability to discriminate between the two lines as the etalon reflectivity increases.

The finite width of the fringes gives the Fabry-Perot a finite resolving power, or ability to distinguish the existence of two closely spaced, equal-intensity, lines in a spectrum. This resolving power can be defined by the usual criteria (Rayleigh, 1879; Schuster, 1904; Sparrow, 1916; Houston, 1927; Ditchburn, 1930; Buxton, 1937). The most commonly used criterion for Fabry-Perot interferometers is the Houston criterion (Ramsay *et al.*, 1941 ; Chabbal, 1953); that is, two equal-intensity lines are considered to be resolved when their maxima are separated by their full-width at half-height (FWHH). Thus, assuming that these two lines give rise to a true HWHH a, and its associated normalized HWHH a^{*}, then the resolving power is:

$$\mathbf{R} = \sigma\,(2a)^{-1} = n_0\,(2a^{*})^{-1} = n_0\,N_R\,. \qquad 2.1.15$$

In the above equation, σ is the mean wavenumber of the radiation of the two lines. For the sake of completeness, the resolving limit is defined as the inverse of the resolving power times the wavenumber, which in terms of Equation 2.1.15) is given by:

$$\mathbf{r} = \frac{\sigma}{\mathbf{R}} = 2a = 2a^{*}\,\Delta\sigma = \Delta\sigma\,N_R^{-1}\,. \qquad 2.1.16$$

At this point it should be noted that the classical approach used thus far is not the only method employed to obtain the derivations. Indeed, as Connes (1961) and

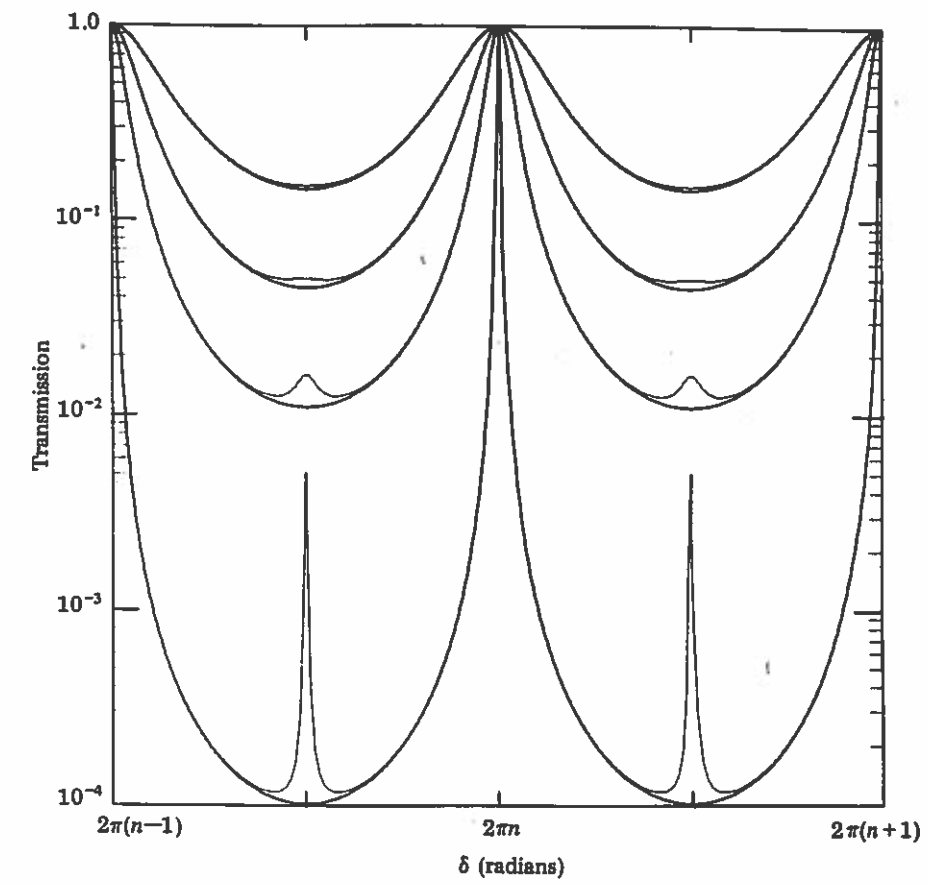

FIGURE 2.6. Contrast effects on a transmission etalon. Another emission line with 1 % of the emission rate of the main emission line has been superimposed at the minimum transmission point of the latter. Same conditions as Figure 2.4.

Stoner (1966) have shown, the same results can be obtained by using the elegant optical transient response method on the instrument, just as in electrical filter theory, to determine the instrumental function. This topic will be discussed in Chapter 5, Section 3.2. The classical approach has been used here in order to provide continuity with the earlier literature on the subject.

2. Real sources

In order to operate in the real world, the rather arbitrary requirement of monochromatic light sources must be relaxed and line sources of finite width and shape be employed. This can be visualized in terms of a series of closely spaced monochromatic lines with a given intensity distribution as a function of wavenumber . As has been shown in Equation 2.1.8), this wavenumber distribution can be considered in terms of the etalon order n and/or the phase δ. When this collection of lines is examined by an etalon, there will be a superposition of etalon-broadened lines at slightly different angles which depend on the center wavenumber of each of these lines; thus, the final result is a broadened representation of the original intensity distribution. In the limit, when these monochromatic lines are infinitely close together, their distribution can be expressed by an analytical expression. Using a unit area Gaussian profile as an example, the source function with a true HWHH dg is given by:

$$S = \left(\pi^{1/2} G \right)^{-1} \exp \left[-(\sigma - \sigma_0)^2 G^{-2} \right] . \qquad 2.2.1$$

G is defined as $G = dg\,[\ln(2)]^{-1/2}$. Employing Equations 2.1.8) for the phase and 2.1.10a) for the free spectral range, and introducing them into Equation 2.1.7b), the following expression is obtained for the etalon response to the assumed source profile of 2.2.1):

$$Y(\sigma_0) = (\pi^{1/2} G)^{-1} [1 - A\,(1-R)^{-1}]^2 (1-R)^2$$

$$\times \int_{-\infty}^{\infty} \left\{ \exp - \left[(\sigma - \sigma_0)^2 G^{-2} \right] \left[1 + R^2 - 2R \cos(2\pi\sigma\,\Delta\sigma^{-1} \cos\Theta) \right]^{-1} \right\} d\sigma \ . \qquad 2.2.2a$$

The solution to Equation 2.2.2a) can be obtained analytically if Equation 2.1.7c) is used for the etalon function. The solution is given below:

$$Y(\sigma_0) = [1 - (1-R)^{-1}]^2 (1-R)(1+R)^{-1}$$

$$\times \left\{ 1 + 2 \sum_{k=1}^{k=\infty} R^k \exp - [\pi\,\Delta\sigma^{-1} G\,k]^2 \cos(2\pi k \sigma_0\,\Delta\sigma^{-1} \cos\Theta) \right\} . \qquad 2.2.2b$$

The argument of the exponential is found to be equal to $k^2 \pi^2 dg^2 [\Delta\sigma^2 \ln(2)]^{-1}$, which in our notation of normalized widths reduces to $k^2 \pi^2 (dg^*)^2 [\ln(2)]^{-1}$. Note, in particular, that these results indicate that the important width is the normalized width of the source, i.e., the ratio of the source width to the etalon period, or free spectral range, and not the absolute width. Referring to Equation 2.2.2a), the mathematical operation that describes the integral is the cross-correlation integral (Bracewell, 1965). For symmetrical functions, such as the presently assumed Gaussian function, i.e., when $F(-x) \equiv F(x)$, it is possible to change the order of the

argument of the exponential without affecting the results. Thus, if in Equation 2.2.2a) one would have used $(\sigma_0 - \sigma)$ in the argument rather than $(\sigma - \sigma_0)$, the operation resulting from this change would have been the convolution integral (Bracewell, 1965). Since convolution is commutative, associative, and distributive, it is very convenient to use; however, the correct results will be obtained only when the functions under consideration are symmetric, such as the Gaussian source function of Equation 2.2.1.). In the following text the convolution operational calculus will be used for convenience; however, the reader should keep in mind that cross-correlation for symmetrical functions is being used. When the need arises, the proper cross-correlation calculus must be used to obtain the correct answer.

Another example of a source shape is the Lorentz, or dispersion, profile, assumed in this case to have unit area and true HWHH l , i.e.,

$$S = (l\pi)^{-1} \left\{ 1 + [(\sigma - \sigma_0)^2 l^{-2}] \right\}^{-1} . \qquad 2.2.3$$

The etalon response to this profile is:

$$Y(\sigma_0) = [1 - A\,(1-R)^{-1}]^2 (1-R)(1+R)^{-1}$$

$$\times \left\{ 1 + 2 \sum_{k=1}^{k=\infty} R^k \exp - [2\pi\,\Delta\sigma^{-1} l k] \cos(2\pi k \sigma_0\,\Delta\sigma^{-1} \cos\Theta) \right\} . \qquad 2.2.4a$$

Again, in this expression, it is found that the important width is the width of the source relative to the etalon periodicity. Note that the reflectivity and the exponential terms can be combined into an effective reflectivity given by $R_E = R \exp - (2\pi l^*)$. Since for l^* greater than zero the exponential is then less than unity, it is found that $R_E \leqslant R$. This example has been used specifically to show the effects of the etalon on the original source. For instance, introducing the value of R_E in Equation 2.1.7b) the latter becomes:

$$Y_t(\delta) = [1 - A\,(1-R)^{-1}]^2 (1-R)^2 [1 + R_E^2 - 2R_E \cos\delta]^{-1} . \qquad 2.2.4b$$

If, for convenience, A is arbitrarily set equal to zero, then the results are obvious from Equation 2.2.4b). First, the resultant maximum transmission has decreased from unity to $(1-R)(1+R_E)/[(1+R)(1-R_E)] \leqslant 1$ and correspondingly the minimum has changed from $(1-R)^2(1+R)^{-2}$ to $(1-R)(1-R_E)/[(1+R)(1+R_E)]$ and the latter is numerically larger than the former. Thus the contrast, or ratio of maximum to minimum, has also decreased. Second, the HWHH of the resultant profile has increased as can be seen by introducing R_E in Equation 2.1.12a). Also, since the area under the profile (for one period of the interferometer) has been kept constant, the loss of transmission at the maximum is made up by a wider profile with higher tails, i.e., higher minimum. The above results show, in a simplified manner,

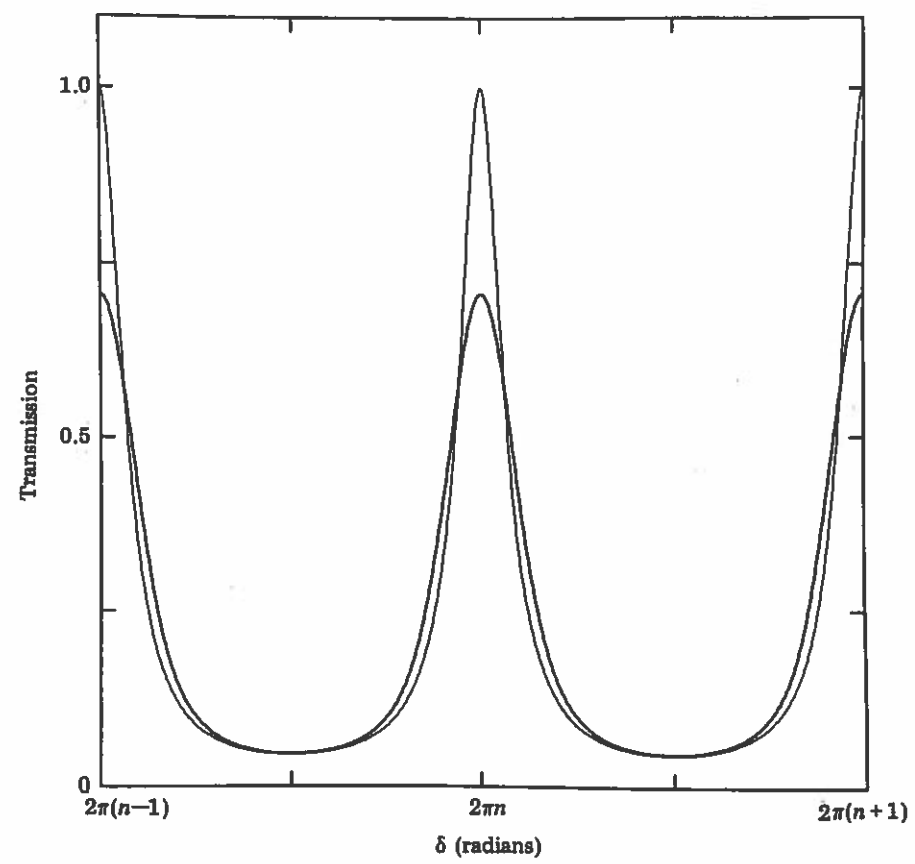

FIGURE 2.7. Broadening effects of an etalon on a Gaussian emission profile. The monochromatic line response is shown for comparison.

the basic effects of the broadening and consequent loss of transmission on a source profile when examined by an etalon. For illustration purposes, the broadening effects of a Gaussian line on the resultant profile are given in Figure 2.7. The breadth of this Gaussian line profile has been set equal to the breadth obtained from the reflective coatings alone. The monochromatic line, or ideal etalon, behavior is included for comparison.

As it will be seen later, it is convenient to define the general source coefficient in equations such as 2.2.2b) and 2.2.4a) to be equal to the exponentials in these equations. If this coefficient is called s_k, the equation that expresses the etalon

transmission to a given arbitrary source is:

$$Y(\sigma_0) = [1-A\,(1-R)^{-1}]^2(1-R)(1+R)^{-1}$$
$$\times \left\{ 1 + 2 \sum_{k=1}^{k=\infty} R^k s_k \cos(2\pi k\ \sigma_0\ \Delta\sigma^{-1} \cos\Theta) \right\}. \qquad 2.2.5$$

In the above definition of the source coefficient, it is understood that s_k stands for any given arbitrary profile or a combination of profiles, as is usually the case.

When the line widths, such as l or dg of Equations 2.2.2b) and 2.2.4a), tend to the limit of zero width, the just-mentioned equations revert to the case of a monochromatic line derived earlier when discussing the behavior of the basic instrument, given in Equations 2.1.7a) → 2.1.7e). On the other extreme, when the line width becomes very large, i.e., l (or dg) >> $\Delta\sigma$, the value of the exponentials in either 2.2.2b) or 2.2.4a) [or s_k of 2.2.5)] goes to zero and the summation term also goes to zero. The etalon response to a very wide line is then:

$$Y(\sigma_0) = [1-A\,(1-R)^{-1}]^2(1-R)(1+R)^{-1}\,. \qquad 2.2.6$$

The response to a very wide line is, in the limit, the response of the etalon to white, or continuum, light and is only dependent on the reflectivity and the absorption/scattering properties of the coatings. This behavior was the basis of the proposal by Giacomo (1952) for a measurement method of the reflectivity of etalon coatings. In particular, note that Equation 2.2.6) indicates that an etalon discriminates against a continuous background, a very useful property when measuring an emission line in the presence of such a background.

3. Imperfect etalons

With this mathematical framework, it is now possible to examine the effects of having reflective surfaces which are not absolutely flat or held perfectly parallel. For the purposes of this discussion, it does not matter whether or not the surface defects are inherent to the substrates where the reflective coatings are deposited, or the reflective coatings themselves. Further, it is possible to presume these defects are associated with only one of the reflective surfaces while the other surface is assumed to be ideally perfect. As a first example, it is assumed that the imperfect surfaces are microscopically inhomogeneous in a random fashion, with a root mean square variation which is very small in relation to the size and spacing of the etalon. In the classical sense this arrangement can be viewed as being equivalent to a large collection of elemental etalons of varying spacing, with a distribution given by the microscopic inhomogeneities. Furthermore, since these elemental etalons only redistribute the radiation, the functions that describe them must have unit area (Chabbal, 1953). In general, the imperfect-surface etalon is thus expressed as a sum of elemental etalons weighed by a distribution function. This classical approach presumes

incoherent illumination, where the final result is obtained by summing the resultant intensities from the elemental etalons. The more appropriate summation of the amplitudes of the elemental etalons, and the differences with the classical approach, is discussed in Chapter 8, Section 3. For the present random-microscopic inhomogeneities case, the distribution function of the phase is a normal, or Gaussian, distribution of unit area:

$$Y(\delta_0) = \tau^2 (\pi^{1/2}\Delta\delta)^{-1}$$
$$\times \left\{ \int_{-\infty}^{\infty} \exp-[(\delta_i - \delta_0)^2 \Delta\delta^{-2}][1+R^2-2R\ \cos\delta_i]^{-1}\, d\delta_i \right\}$$
$$= [1-A\,(1-R)^{-1}]^2 (1-R)(1+R)^{-1}$$
$$\times [1+2 \sum_{k=1}^{k=\infty} R^k \exp-(2^{-1}\Delta\delta\ k)^2 \cos(k\,\delta_0)\ ] \ . \qquad 2.3.1$$

In the above equation, $\Delta\delta$ is a measure of the dispersion in phase caused by the varying length of the elemental etalons. This dispersion can also, by similarity, be associated with a change in wavenumber of the source such that its dispersion appears as a phase dispersion represented by $\Delta\delta$. Thus, by relating the changes in frequency with those in etalon spacing length and finally reducing the latter into terms of wavelength, after some manipulation, it is found that the equivalent HWHH, expressed in terms of fractions of wavelength (λ/m) is given by (Chabbal, 1953):

$$df = 2.35\ \Delta\sigma\ m^{-1} \ . \qquad 2.3.2a$$

In terms of normalized HWHH the above equation becomes:

$$df^{*} = 2.35\ m^{-1} \ . \qquad 2.3.2b$$

The results derived for the surface defects in the above equations demonstrate that these defects can be treated as a constant of the etalon, since the function that describes them is found to be independent of the spacing of the etalon and the value of the reflectivity. By arguments similar to those used in the reflectivity case discussed earlier, a surface finesse is defined as (Chabbal, 1953):

$$N_D = (2\ df^{*})^{-1} = (4.71)^{-1}\ m \ . \qquad 2.3.3$$

When this value of df^{*} is reintroduced into the argument of the exponential of Equation 2.3.1), and after converting it into a phase, we obtain the result that $(2^{-1}\Delta\delta)^2 = (\pi\ df^{*})^2[\ln(2)]^{-1}$. This is, indeed, the same result obtained for the argument of the exponential of Equation 2.2.2b) for a Doppler-broadened source emission profile. Thus, the normalized HWHH of these microscopic-surface-inhomogeneities will be distinguished by the label df_G^{*} .

For an etalon that has errors of curvature, usually associated with polishing defects of the substrate, or is misaligned in the sense that the flats form a very small wedge, the probability distribution is found to be constant over a given phase interval (Duffieux, 1939; Chabbal, 1953). The associated wavenumber distribution is then also constant over a small wavenumber range and zero outside this interval. The implicit assumptions in the above are circular flats for the curvature case and either very large area or square-shaped flats for the misalignment case. For other examples see the reports of Duffieux (1939) and Hill (1963). The result for the errors of curvature and misalignment, when these errors are very small compared with the spacing and the area of the flats, can then be given in terms of fractions of a wavelength m (Duffieux, 1939; Chabbal, 1953):

$$df = \Delta\sigma\ m^{-1} \ . \qquad 2.3.4a$$

In terms of the normalized widths, the result is:

$$df^{*} = m^{-1} \ . \qquad 2.3.4b$$

Then by definition the surface finesse becomes:

$$N_D = (2\ df^{*})^{-1} = 2^{-1}m \ . \qquad 2.3.5$$

The normalized-curvature defects and misalignment HWHH will be distinguished by the label df_C^{*} . The analytical representation of an etalon with curvature-polishing defects, or with a slight wedge misalignment, analyzing a monochromatic line is then:

$$Y(\sigma_0) = [1-A\,(1-R)^{-1}]^2 (1-R)(1+R)^{-1}$$
$$\times \left\{ 1 + 2 \sum_{k=1}^{k=\infty} R^k \operatorname{sinc}(2\ k\ df^{*}) \cos(2\pi\, k\, \sigma_0\ \Delta\sigma^{-1} \cos\Theta) \right\} . \qquad 2.3.6$$

In the above equation, and subsequently, the sinc function is defined as (Bracewell, 1965):

$$\operatorname{sinc}(x) = (\pi x)^{-1} \sin(\pi x) \ .$$

The effects of less-than-perfect etalon flats (and misalignment) are seen from Equations 2.3.1) and 2.3.6), to result in instrumental broadening relative to an ideally perfect etalon with the same reflectivity as well as its concomitant decrease in peak transmission. As done previously, the assumption of microscopic inhomogeneities distributed with a Lorentz population provides the simpler visualization of the effects of other-than-perfect surfaces of an etalon. Since the results obtained are identical with those of Equations 2.2.4a) and 2.2.4b), they will not be repeated here. The main result is that the etalon can be described by an effective reflectivity, R_E , which is the product of the original reflectivity, R, and a function related to the assumed Lorentzian defects, i.e.,

$$R_E = R \exp-(2\pi\ l^*) . \qquad 2.3.7$$

Again, in this equation it is possible to define the finesse and HWHH in terms of fractions of a wavelength to be (approximately):

$$df_L^* = (2N_D)^{-1} \approx 2\ m^{-1} . \qquad 2.3.8$$

Therefore, using equation 2.3.7) as a general representation of the effects of less-than-perfect surfaces of an etalon, it is found that the loss in reflectivity, with the associated loss in peak transmission and consequent broadening of the profile, is the main effect. For non-zero values of the surface defect the effective reflectivity has a value less than unity even though the actual reflectivity R can be made as close to unity as desired. This behavior of a maximum effective reflectivity leads to the concept of a limiting finesse for an etalon (Chabbal, 1953), that is, that finesse (or normalized HWHH) an etalon can only asymptotically approach. For instance, it is possible to define a finesse, N_{R_E}, by inserting R_E of Equation 2.3.7) into Equation 2.1.13b), as follows:

$$N_{R_E} = \pi\ R_E^{1/2} (1 - R_E)^{-1}$$

$$= \pi\ R^{1/2} [\exp(-2\pi l^*) (1-R) + (1-\exp(-2\pi l^*)]^{-1} . \qquad 2.3.9$$

The normalized etalon width, e_E^*, can be found, with the help of Equation 2.3.9), to be equal to:

$$e_E^* = (2\ N_{R_E})^{-1} , \qquad 2.3.10$$

and the limiting width, e_l^*, can be obtained as follows:

$$e_l^* = \lim_{R \to 1} e_E^* = [1-\exp(-2\pi l^*)] [2\pi \exp(-\pi l^*)]^{-1} . \qquad 2.3.11$$

This limiting width has a value greater than zero (for l^* greater than zero), unlike the value of a^* of Equation 2.1.12a) which goes to zero as the limit $R \to 1$ is approached. Therefore, the limiting finesse can be re-written from Equation 2.3.11), or:

$$N_l = (2e_l^*)^{-1} = [\pi \exp(-\pi l^*)] [1-\exp(-2\pi l^*)]^{-1} . \qquad 2.3.12$$

The peak transmission of an etalon with surface defects, in the absence of absorption, is given by:

$$Y_t(0) = (1-R) (1+R)^{-1}(1+R_E) (1-R_E)^{-1} < 1 , \qquad 2.3.13a$$

since $R_E < R$. For $l^* << 1$ and R approaching unity, Equation 2.3.13a) can be approximated by:

$$Y_t(0) \approx 1 - \pi\ l^* . \qquad 2.3.13b$$

This result illustrates (very approximately) the loss of transmission due to the existence of a limiting finesse caused by surface defects. The minimum transmission is also affected by the presence of surface defects. This is better illustrated in terms of the contrast, C_E, i.e.:

$$C_E = (1+R_E)^2 (1-R_E)^{-2} < (1+R)^2 (1-R)^{-2} . \qquad 2.3.14$$

For very small values of l^*, a limiting contrast can be found to exist:

$$C_l = \lim_{R \to 1} C_E \approx 1 + (2\ N_l \pi^{-1})^2 \simeq (\pi\ l^*)^{-2} . \qquad 2.3.15$$

In this expression, the approximate relationship between contrast and finesse given in Equation 1.1.14) has been used.

Thus, it becomes necessary to find the best compromise for the reflective coatings to be used with an etalon known to be imperfect. Chabbal (1953) has addressed this problem and his results, based on the Luminosity Resolution Product (LRP) assumption that a user requires the highest product of peak etalon transmission times the smallest reasonable etalon width (or HWHH), show that the best compromise occurs for values of the ratio df^*/a^* near unity, that is, finesse ratios $N_R (N_D)^{-1}$ near unity. These results must be tempered in the presence of absorption/scattering in the coatings, in particular for small values of a^* (or high R), since the absorption effect enters as $[1-A (1-R)^{-1}]^2$.

Since both a^* and df^*, i.e., the etalon width associated with the reflective coatings and the width associated with the lack of flatness of the etalon, are independent of the etalon spacing, the total normalized width of the etalon, e^*, is also a constant of the instrument. As shown earlier, the reflective and surface-defect widths 'add' in a cross-correlation operation form (or convolution sense for symmetric profiles), and the results show that the total normalized etalon width e^* is no less-narrow than the widest of the profiles being cross-correlated. Therefore, as done in Equations 2.1.13), 2.3.3) and 2.3.5), it is possible to define the etalon finesse (Chabbal, 1953):

$$N_e = (2\ e^*)^{-1} = (2\ a^* \oplus df^*)^{-1} , \qquad 2.3.16$$

where the $\oplus$ operator indicates the effect on the widths when two symmetric functions are cross-correlated. The actual width of the etalon function must be extracted from expressions such as Equation 2.3.6). For some special cases the Fourier series representation expressions can be reduced to simple analytical expressions [for instance, see Khashan (1979)] but, as a rule, the Fourier series treatment is the only available solution. In the present text the Fourier representation will be employed for the sake of generality.

Although, as has been discussed earlier, the cross-correlation integral operation represents the correct resultant function of an ideal etalon combined with an arbitrary source function, or surface defects (Wilksch, 1985), the convolution integral operation provides the same answer for symmetrical functions. Since symmetric functions are normally used in discussing Fabry - Perot spectrometers (Chabbal, 1953; Hernandez, 1970), the convolution operation notation is widely employed in this context. In the following text a rather brief overview of the definitions and operations associated with convolution, as used in Fabry - Perot spectrometer literature, will be presented.

The convolution of two functions $\mathbf{f}(x)$ and $\mathbf{g}(x)$, giving rise to a new function $\mathbf{h}(x)$, is defined as follows (Bracewell, 1965):

$$\mathbf{h}(x) = \mathbf{f}(x) * \mathbf{g}(x) = \int_{-\infty}^{\infty} \mathbf{f}(u)\, \mathbf{g}(x - u)\, du \ . \qquad 2.3.17$$

Note that the area under $\mathbf{h}(x)$ is equal to the product of the areas of $\mathbf{f}(x)$ and $\mathbf{g}(x)$. The commutative, associative and distributive properties of the convolution operation are (Bracewell, 1965):

$$\mathbf{f} * \mathbf{g} = \mathbf{g} * \mathbf{f} \ , \qquad 2.3.18$$

$$\mathbf{f} * (\mathbf{g} * \mathbf{h}) = (\mathbf{f} * \mathbf{g}) * \mathbf{h} \ , \qquad 2.3.19$$

$$\mathbf{f} * (\mathbf{g} + \mathbf{h}) = \mathbf{f} * \mathbf{g} + \mathbf{f} * \mathbf{h} \ . \qquad 2.3.20$$

The abbreviated asterisk notation is convenient, since the asterisks behave like multiplication signs (Bracewell, 1965).

Further, if the functions **f**, **g**, and **h** have widths (either HWHH or FWHH) f , g , and h , it is customary to state the effects of the convolution operation on the function widths as (Chabbal, 1953):

$$h = f \oplus g \ . \qquad 2.3.21$$

Thus, in general terms, the resultant profile obtained from a Fabry - Perot device which has a width y , is expressed as:

$$y = s \oplus e \oplus f \ . \qquad 2.3.22$$

In Equation 2.3.22) s represents the source width, e the etalon width, and f the aperture width. Note that these widths may themselves be the result of further convolution operations. As would be expected, the commutative, associative and distributive properties of the parent function operations are reflected in the widths.

In order to present general usage graphs (Chabbal, 1953) and tabulations (Hernandez, 1970) on the properties of Fabry - Perot spectrometers, a non-dimensional method is normally used. For instance, to show the broadening properties of surface defects of width f on an etalon of width a, the quantity

$a\ /(a \oplus f\ )$ as a function of $f\ /a$ is given. The limiting property of the former ratio is:

$$\lim_{f \to 0} \left| \ a\ /(a \oplus f\ ) \right| = 1 \ . \qquad 2.3.23a$$

The above result is based on the property of a function becoming a Dirac delta (δ) function as the width becomes negligibly small, i.e.:

$$\lim_{f \to 0} \mathbf{f}(x) = \delta(x) \ . \qquad 2.3.24$$

Similar operations to those given above for the widths can also be defined for the peak value, or transmission τ, of the functions. A useful transmission operation to remember is:

$$\lim_{f \to 0} \left| \ \tau(a)\ /\ \tau(a \oplus f\ ) \right| = 1 \ . \qquad 2.3.23b$$

A most useful property of the convolution operation is its connection with the Fourier transform (Bracewell, 1965). In the following discussion, it is explicitly assumed that the transforms exist in the limit. Thus, if a function $\mathbf{f}(x)$ has a transform $F(s)$, this is expressed in shorthand as:

$$\mathbf{f}(x) \supset F(s) \ . \qquad 2.3.25$$

For real functions, the following property applies:

$$\mathbf{f}(-x\ ) \supset F(-s\ ) \ . \qquad 2.3.26$$

The relations between transform pairs and convolution operations are:

$$\mathbf{f} * \mathbf{g} \supset F \bullet G \ , \qquad 2.3.27$$

$$\mathbf{f} \bullet \mathbf{g} \supset F * G \ . \qquad 2.3.28$$

In the last two equations the $\bullet$ symbol indicates simple multiplication. Extension of these equations to the associative, commutative, and distributive properties of convolution is trivial.

For completeness, the relation between convolution and cross-correlation should be given. The cross-correlation integral (Bracewell, 1965) is:

$$\mathbf{h}(x) = \mathbf{f}(x) \blacksquare \mathbf{g}(x) = \int_{-\infty}^{\infty} \mathbf{f}(u - x)\, \mathbf{g}(u)\, du \ , \qquad 2.3.29$$

where the symbol $\blacksquare$ indicates the cross-correlation operation. From the above definition, both the properties of cross-correlation and its relation with convolution and the Fourier transform can be found:

$$\mathbf{f}(x) \blacksquare \mathbf{g}(x) \neq \mathbf{g}(x) \blacksquare \mathbf{f}(x) \ , \qquad 2.3.30$$

$$\mathbf{f}(x) \blacksquare \mathbf{g}(x) = \mathbf{f}(-x) * \mathbf{g}(x) \ , \qquad 2.3.31$$

$$\mathbf{f}(-x) \blacksquare \mathbf{g}(x) = \mathbf{g}(-x) \blacksquare \mathbf{f}(x) = \mathbf{f}(x) * \mathbf{g}(-x) \ . \qquad 2.3.32$$

$$\mathbf{f}(x) \blacksquare \mathbf{g}(x) \supset F(-s) \bullet G(s) \ . \qquad 2.3.33$$

Therefore, for symmetrical functions, when $\mathbf{f}_s(x) \equiv \mathbf{f}_s(-x)$, the properties of cross-correlation become those of convolution described earlier, since:

$$\mathbf{f}_s(x) \blacksquare \mathbf{g}_s(x) = \mathbf{f}_s(x) * \mathbf{g}_s(x) \ . \qquad 2.3.34$$

This last equation shows the basis for employing the convolution approach, with its simpler rules of operation.

To recover a line profile from a measurement, the process of deconvolution is employed. When the measurement is described by **h**, the instrument by **f** and the line profile by **g**, the measurement is defined as:

$$\mathbf{h} = \mathbf{f} * \mathbf{g} \supset F \bullet G \ . \qquad 2.3.35$$

Therefore, a function $\mathbf{f}^{-1}$ can be defined such that the following operation applies:

$$\mathbf{f}^{-1} * \mathbf{h} = \mathbf{f}^{-1} * \mathbf{f} * \mathbf{g} \supset F^{-1} \bullet F \bullet G \ . \qquad 2.3.36$$

When $F^{-1} \bullet F \equiv 1$, the convolution $\mathbf{f}^{-1} * \mathbf{f}$ is, by definition, a Dirac delta (δ) function, thus:

$$\mathbf{f}^{-1} * \mathbf{h} = \delta * \mathbf{g} = \mathbf{g} \supset G \ . \qquad 2.3.37$$

The function F^{-1}, associated with $\mathbf{f}^{-1}$, is found to be equal to:

$$F^{-1} = F^{*} \ | F^{*} \ F |^{-1} \ , \qquad 2.3.38$$

where F^{*} is the complex conjugate of F. Deconvolution is then easier to perform in the Fourier transform plane, since the operation is reduced to a simple division. In practice, the presence of noise in the measurement renders this approach nearly useless. A method to accomplish deconvolution, when noise is present in the measurement, will be discussed later in the text.

The usefulness of the cross-correlation, convolution and Fourier transform relations lies in the ability to recognize functions, via their transform, as the product (or convolution) of other basic functions, as well as to manipulate functions which are not themselves analytic in the real plane as analytic functions in the transform plane (i.e., Voigt profiles). For a complete and rigorous treatment of convolution, cross-correlation and Fourier transforms, the reader is referred to a book such as Bracewell's (1965).

After this aside on notation, it is now possible to present some of the consequences of surface defects on ideal etalons. Figures 2.8 and 2.9 illustrate the effects of the combination of the etalon reflectivity function with microscopic random defects of polishing and curvature of the flats respectively. Figures 2.8a and 2.9a show the broadening effects expressed as the ratio of the limiting function width to the

resultant etalon width [a / ($a \oplus g$) in Figure 2.8] as a function of the ratio of the limiting function width to the reflective function width (g / a). Figures 2.8b and 2.9b show the product of the etalon peak transmission times the fraction of the limiting function width relative to the etalon width. The Chabbal (1953) LRP criterion suggests the best reflective coatings to be used are those associated with the maximum of the curves in Figures 2.8b and 2.9b. As will be seen later, this is not the only criterion available for determining the best compromise of operation for a Fabry-Perot interferometric spectrometer. These figures are based on the assumption of a high-finesse etalon where the periodic character of a Fabry-Perot can be neglected. For lower finesse, when the overlap of the tails of the neighboring profiles is significant, similar figures can be derived from the fixed-finesse tabulations of Hernandez (1970).

4. Real interferometric spectrometers

In a real instrument, it is necessary to observe over a finite solid angle in order to receive and collect some flux. The most obvious example is the human eye, where this solid angle is defined by the effective detectors (rods, cones, optical nerve) of the eye-lens combination, although as a rule, the imperfections of the eye set the basic limitation on this solid angle. For other detectors, the solid angle is defined by a lens and aperture combination, and the latter may be a silver halide grain in a photographic emulsion, the size of the electron beam of a television tube, the slit of a microdensitometer examining a photographic plate, an aperture projected onto a quantum detector, etc. Thus, it is possible to generalize that a measurement with a Fabry-Perot consists of the recording of the source's flux, after modification by the etalon, by a detector of finite angular spread. In the following discussion, the detector is considered to be ideal, i.e., it changes the signal in such a way that the overall result can be considered to be a simple change of scale of the analytical expressions.

The most obvious effect to be noticed, when a finite angular spread detector is used, is that the signal recorded will be changed from that transmitted by the etalon because of the spatial integration of the etalon signal over this finite angular spread of the detection device. Therefore, in general, the flux received by the detector can be defined as follows:

$$Y(\sigma) = \mathbf{I}\,\mathbf{A}\,\epsilon\,\tau_L\,\Omega\,\tau_{e,\Omega} \ . \qquad 2.4.1$$

In the above equation, **I** is the irradiance of the source, **A** is the useful area of the etalon, Ω is the solid angle projected on the etalon by the detector, ϵ is the quantum efficiency of detection (a simple proportionality constant in the present case; however, with a value less or equal to unity). τ_L includes losses in transmission not included in the etalon function $\tau_{e,\Omega}$. This last function is the combined etalon

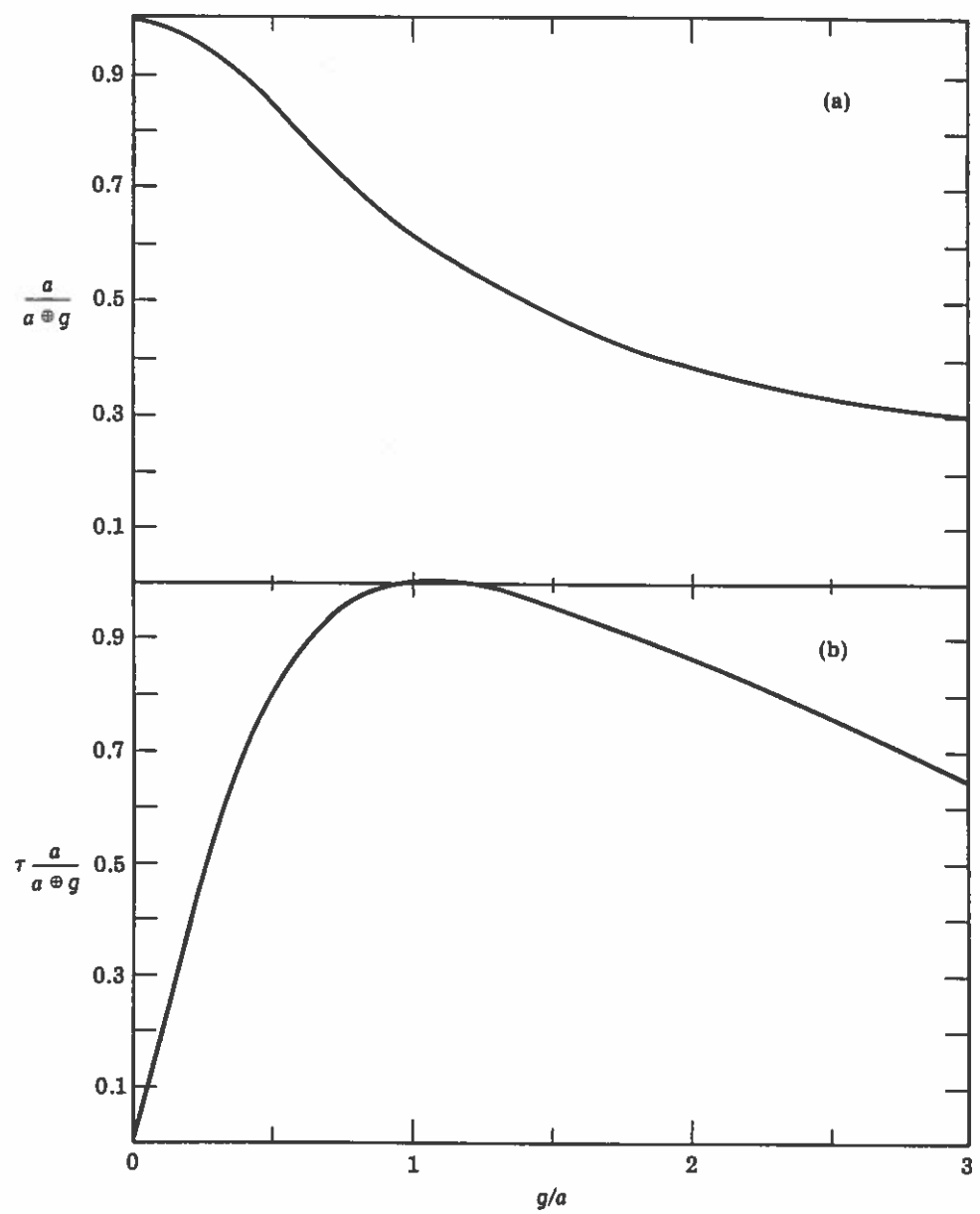

FIGURE 2.8. Effects of microscopic random surface defects on an ideal etalon. The results are shown as: a) the ratio of the ideal etalon width to the resultant width due to the surface defects and ideal etalon, and b) the product of the etalon peak transmission times the ratio given in a). Both are shown as a function of the ratio of the surface defects function width to the perfect etalon width. After Chabbal (1953).

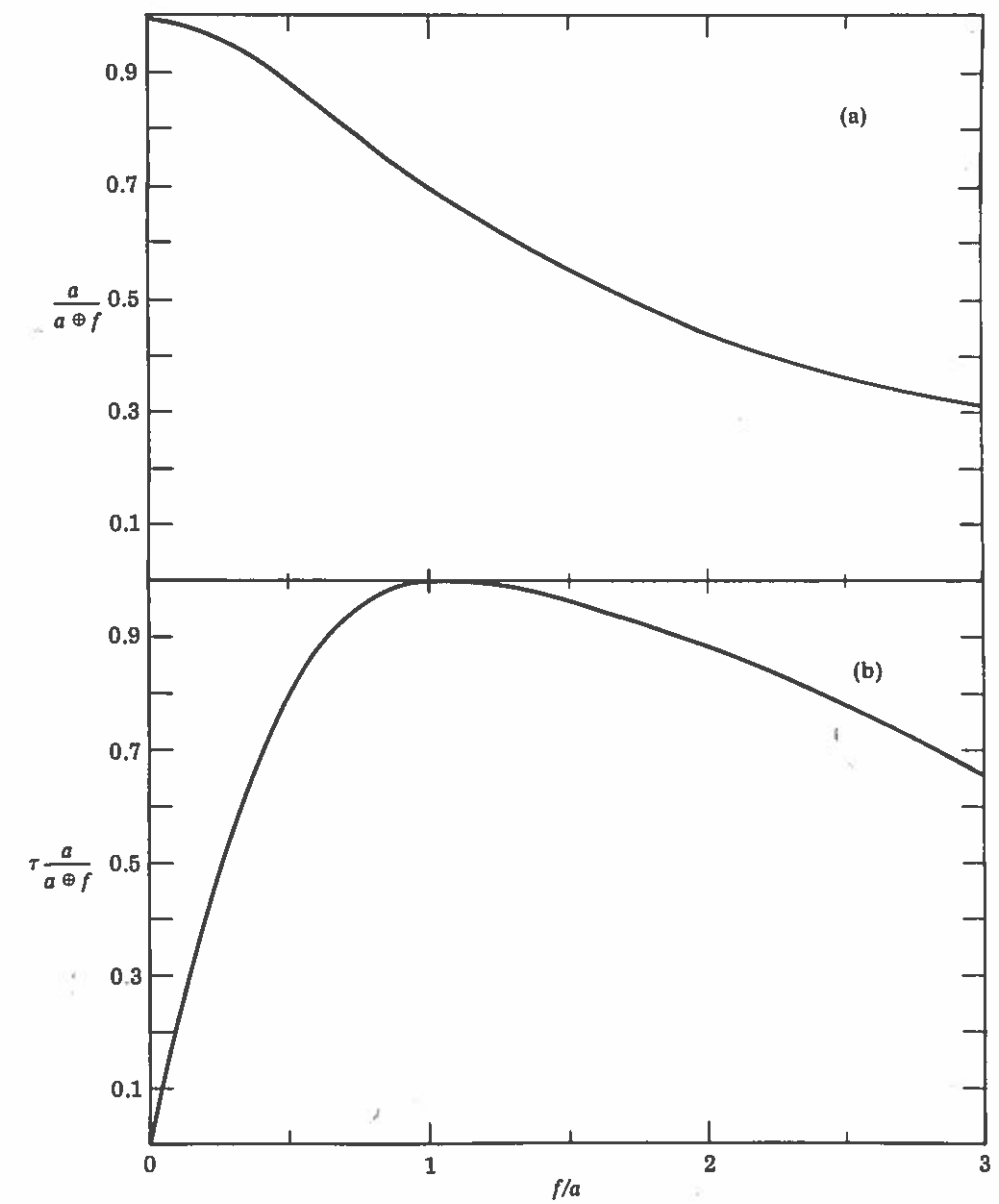

FIGURE 2.9. Same as Figure 2.8, except for curvature defects of the etalon surfaces. After Chabbal (1953).

modulating effect $\tau_e(\sigma)$ with the aperture smearing effects. Note that $\tau_e(\sigma)$ is the shorthand notation of a function such as that given in Equation 2.3.6).

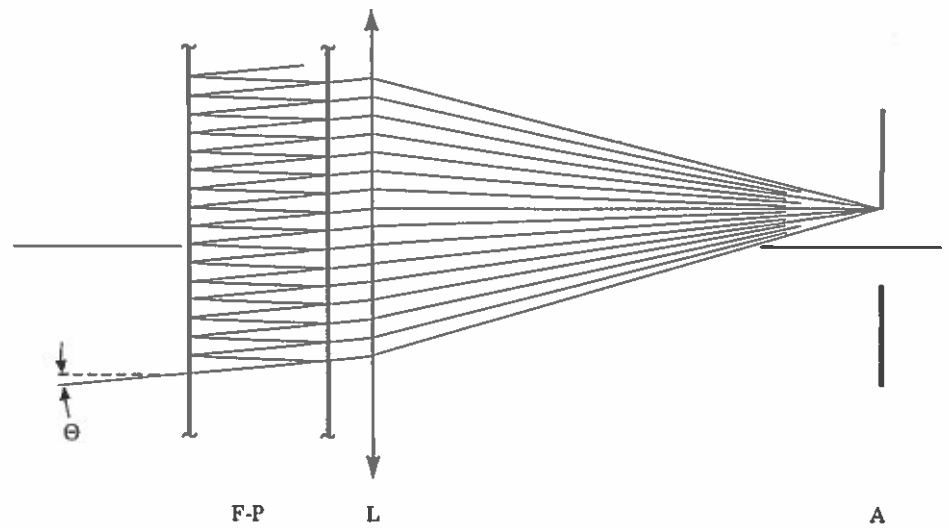

FIGURE 2.10. Schematic representation of the Jacquinot and Dufour (1948) spectrometer.

For ease of mathematical treatment, a finite aperture is considered to be centered about the etalon axis, as well as being symmetrical about this axis. Also, this aperture is constrained to have unity transmission where desired and zero everywhere else. The general case of an annulus centered about the optical axis at a plane where a lens has projected the etalon transmission fringes, and a linear detector behind this annulus, will satisfy the requirements described above. In fact, this is a description of the Jacquinot and Dufour (1948) spectrometer, shown in Figure 2.10, where they used an annulus of zero inside diameter, or circular aperture. When this circular aperture size is defined in terms of the angles it projects at the etalon, the necessity of dealing directly with a lens is dispensed, although this lens is a necessary part of the interference process. Therefore, a circular aperture, or the more general case of an annulus, will receive radiation which passes through the etalon between angles Θ_1 and Θ_2 associated with the annulus inner and outer radii respectively. Note that these angles are measured away from the normal to the etalon reflective surfaces and, because of the radial symmetry of the etalon and the annulus, for any angle Θ_i there exists a circle where the spectral information is constant.

The flux detected can be calculated easily by integrating over the solid angle range the annulus transmits:

$$Y(\sigma) = \mathbf{I}\,\mathbf{A}\,\epsilon\,\tau_L \int_0^{2\pi}\int_{\Theta_1}^{\Theta_2} \tau_e(\sigma)\,\sin\Theta\; d\Theta\; d\Phi\ . \qquad 2.4.2a$$

Because of the previously mentioned radial symmetry, the integration over Φ is straightforward and reduces to 2π. The function describing $\tau_e(\sigma)$ can be any of the results derived earlier, namely, a monochromatic source and a perfect etalon of Equations 2.1.7a) → 2.1.7e), a finite width source function and perfect etalon of Equations 2.2.2b) and 2.2.4b), a monochromatic source and an imperfect etalon of Equations 2.3.1) and 2.3.6), or for that matter any combination of the above (Hernandez, 1966). The etalon transmission function $\tau_e(\sigma)$ will be given by the general expression:

$$\tau_e(\sigma) = Y(\sigma_i) = [1-A\,(1-R)^{-1}]^2(1-R)(1+R)^{-1}$$
$$\times\left\{1+2\sum_{k=1}^{k=\infty} a_k\,\cos(2\pi k\;2\mu d\,\sigma_i\,\cos\Theta)\right\}. \qquad 2.4.3$$

In the above equation, and throughout this text, the a_ks represent the kth coefficient of the etalon function consisting of the etalon reflectivity, surface defects, source function, etc. Although substitution of Equation 2.4.3) into Equation 2.4.2a) will provide a solution, it is more illustrative to remember the relationship between the angle Θ and wavenumbers given in Equation 2.1.8), that is, for a given wavenumber, any angle Θ_i can be associated with its related order n_i and the central order n_0, thus:

$$\cos\Theta_1 = n_1 n_0^{-1}\ . \qquad 2.4.4a$$

The angle associated with Θ_2 can be similarly defined; however, it is more convenient to define n_2 in terms of n_1 by the relation $n_2 = n_1 - f$, where f is the size of the aperture in orders, then:

$$\cos\Theta_2 = n_2 n_0^{-1} = (n_1 - f)\,n_0^{-1}\ . \qquad 2.4.5a$$

As the reader can discern, the definition of f in the previous equation is related to the normalized HWHH f' by the relation:

$$f' = f\,/\,2\ . \qquad 2.4.6$$

The complete solution of Equation 2.4.2a), using the explicit form of Equation 2.4.3), as well as the relations defined in Equations 2.4.4) and 2.4.5), is found to be equal to:

$$Y(\sigma_i) = \mathbf{I}\,\mathbf{A}\,\epsilon\,\tau_L\; 4\pi f'\,n_0^{-1}\,[1-A\,(1-R)^{-1}]^2(1-R)(1+R)^{-1}$$
$$\times\left\{1+2\sum_{k=1}^{k=\infty} a_k\,\mathrm{sinc}\left[2k\,|f' - f'(\sigma_0-\sigma_i)/\sigma_0|\right]\right.$$
$$\left.\times\,\cos\left[2\pi k\,|\sigma_i\,\Delta\sigma^{-1} - f' - \Delta n_1 + (\sigma_0-\sigma_i)/\sigma_0\,(\Delta n_1 + f')|\right]\right\}. \qquad 2.4.2b$$

In the above equation Δn_1 denotes the location of n_1 from the central order n_0, expressed in terms of orders. The term containing Δn_1, i.e., $(\sigma_0 - \sigma_i)/\sigma_0(\Delta n_1 + f^*)$, or second order term, is quite small since $(\sigma_0 - \sigma_i)/\sigma_0$ is itself very small. Note also the existence of another second order term in the argument of the sinc function. These second order terms are usually neglected in high resolution studies.

Comparison of the results of Equation 2.4.2b) (neglecting second order terms) with Equation 2.4.1) identifies the solid angle Ω with $4\pi f^* n_0^{-1}$, thus showing the linear relationship between the solid angle and f^*.

Further investigation of Equation 2.4.2b) shows the properties of the resultant output $Y(\sigma)$ as a function of the value of f^*. First, for values of $2f^*$ equal to integer values, where the sinc function is equal to zero, the summation term becomes equal to zero and the output is constant, thus practical values of f^* are always less than 0.5. Second, for values of f^* where the sinc function has a finite value, there is a shift of the profile peak by f^* relative to the position of the original profile (Bruce, 1966; Hernandez, 1974). Third, as the value of f^* is increased monotonically from some arbitrarily small value, the flux increases because of the larger solid angle; however, this is coupled with a decreased depth of modulation by the cosine terms since the sinc function decreases in value as its argument gets larger and larger. This loss in the depth of modulation can be identified with broadening of the original etalon profile, as was shown in Equation 2.2.4b).

The relationship between the size of an aperture, in orders, and the angle it subtends, limits the amount of useful flux a Fabry-Perot device can collect. For the simple example of a circular aperture on the axis, i.e., $n_1 = n_0$, Equations 2.4.4a) and 2.4.5a) become:

$$\cos\Theta_1 = 1.0 \ , \qquad 2.4.4b$$

$$\cos\Theta_2 = 1.0 - f\ n_0^{-1} \ , \qquad 2.4.5b$$

or the description of an annulus of zero internal angular radius. Therefore, the solid angle associated with a given aperture f is:

$$\Omega = 2\pi\ (1 - \cos\Theta_2) = 2\pi\ f\ n_0^{-1} \ . \qquad 2.4.7a$$

For small values of Θ_2, the previous expression can be approximated by (Zucker, 1964):

$$\Omega \simeq \pi\ \Theta_2^2 \qquad \Theta_2 << 1 \ . \qquad 2.4.7b$$

This result illustrates a Fabry-Perot spectrometer as a second order angular light gathering device.

When an ideal etalon of very high reflectivity examining a monochromatic line is considered, then the resolving power of Equation 2.1.15) is:

$$\mathbf{R}_0 = n_0\ f^{-1} \ , \qquad 2.4.8$$

which leads to the desired result (Jacquinot, 1954):

$$\Omega = 2\pi\ f\ n_0^{-1} = 2\pi\ \mathbf{R}_0^{-1} \ . \qquad 2.4.7c$$

Therefore, the product of the solid angle of acceptance and resolving power is fixed and equal to 2π. However, for a real instrument examining a finite width line source, the actual resolving power, $\mathbf{R}$, is less than $\mathbf{R}_0$ of Equation 2.4.8), since the fringe width is greater than f [cf., Equation 2.3.22)]. Then, in general:

$$\Omega\ \mathbf{R} = 2\pi\ \mathbf{R}\ \mathbf{R}_0^{-1} \leqslant 2\pi \ . \qquad 2.4.9$$

This topic will be considered in more detail in Chapter 5, Section 1.

Thus, for a practical measurement, there exists a value of f^* where the product of flux and modulation (or resolving power × angle of acceptance) is highest, and this was found by Chabbal (1953) to occur when the ratio of the HWHH of the aperture f^* to the HWHH ε^* of the etalon-source combination is near unity, as seen in Figure 2.11. However, as discussed earlier, the practical value of f^* must always be smaller than 0.5. This is the case because for those values of f^* when the sinc function is zero, i.e., when $2f^*$ is an integer or f^* is very large, the output tends to become constant and it is only dependent on the intrinsic source irradiance, the reflectivity and the absorption/scattering of the coatings. Giacomo (1952) achieved the same result in a practical manner by using a very broad source, that is, the a_ks of Equation 2.4.2b) are forced to very small values and, thus, the summation term tends to zero, and the measurement with and without the etalon in the system gives a measure of the reflectivity. These methods to obtain the reflectivity, by increasing either the aperture size or the source width, provide good results when the absorption/scattering coefficient A is small. A concurrent measurement of the optical flats' transmission is necessary when the absorption/scattering is not negligible.

There is a large similarity between Equations 2.4.2b) for the annulus, and Equation 2.3.6) where the latter referred to curvature defects of the etalon surfaces. Indeed, this similarity can be seen easily since both the curvature defects distribution function and the annulus itself can be represented by a rectangular function. Thus, the results of Equation 2.4.2b) could have been obtained by the cross-correlation of a rectangular function and the etalon-source function, although at the price of making *ad hoc* assumptions about the field of view. The physical treatment under which Equation 2.4.2b) was obtained is therefore to be preferred, as the results naturally follow.

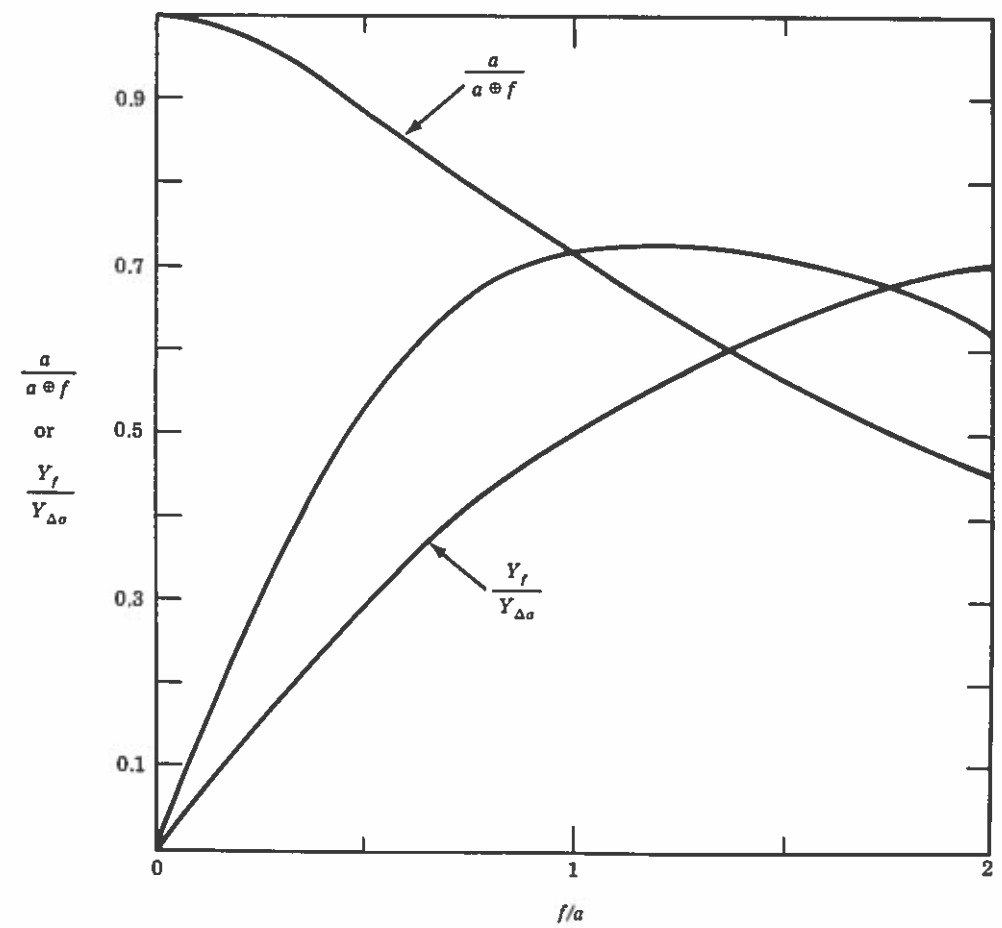

FIGURE 2.11. Effects of a finite aperture on the resultant profile width as a function of the ratio of aperture width to etalon width. The width effects are given as the ratio of the ideal etalon width to the resultant width, and as the ratio of the flux transmitted by the aperture to that flux transmitted over one free spectral range. The product of these two ratios is shown as the unlabeled curve, which shows the existence of an optimum range of operation as indicated by the broad maximum. Note that the ordinate of this curve has been increased by a factor of two. After Chabbal (1953).

The Jacquinot and Dufour (1948) spectrometer is obtained for the solution of Equation 2.4.2b) when $\Delta n_1 = 0$, as would be given for a circular aperture. As these two authors found, the flux transmitted by the spectrometer can be considerably increased, without any loss of resolution, by placing a number of concentric annuli

separated by one order from each other and all of these annuli are made with the same width f^*. However, note that the second order effects discussed in Equation 2.4.2.b) become important in this instance. When this multiple annuli arrangement is attempted by mechanical means, it is found to be limited by stringent mechanical tolerances. Reports in the literature show that about 10 annuli are the practical limit (Sipler and Biondi, 1978; Okano *et al.*, 1980) for purely mechanical construction and about 50 for photographic masks (Dupoisot and Prat, 1979). Note, however, that these multiple annuli masks are wavenumber-sensitive, as given by Equation 2.1.8). Although other systems using two etalons for flux selection have been reported (Jacquinot and Dufour, 1948), their details will be considered when multiple etalon systems are discussed.

Reduction of Equation 2.4.2b) to the Jacquinot and Dufour (1948) spectrometer in its simplest configuration of an on-axis circular aperture i.e., when Δn_1 is made equal to zero and second order terms are neglected, is given by:

$$Y(\sigma) = \mathbf{I}\,\mathbf{A}\,\epsilon\,\tau_L\,4\pi f^*\,n_0^{-1}\,[1-A\,(1-R)^{-1}]^2(1-R)(1+R)^{-1}$$
$$\times\left\{1 + 2\sum_{k=1}^{k=\infty} a_k\,\mathrm{sinc}(2kf^*)\cos[2\pi k\,(\sigma\,\Delta\sigma^{-1} - f^*)]\right\}. \qquad 2.4.2c$$

For the purposes of the following discussion, it is only necessary to note that the argument of the cosine in the above equation consists of a variable, $2\pi k\sigma\Delta\sigma^{-1}$, and a constant, $2\pi kf^*$. The constant gives rise to the previously discussed shift, considered to be a constant of the instrument for a given f^*, and will not be discussed further. The varying part shows the possible choices available to affect the modulation of the signal. The available variables are the wavenumber, the index of refraction and the spacing of the etalon, with the latter two embedded in the free spectral range, as given in Equation 2.1.10a).

The approach used by Jacquinot and Dufour was to change the index of refraction, as was done earlier by Jackson and Kuhn (1938a), to tune the passband of their etalons. Note that this mode of operation is the inverse of that employed in the early days to determine the index of refraction of gases (see for instance Meggers and Peters, 1918). The change in this index of refraction can be considered to be a change in the optical thickness in the gap μd, or a change in the effective wavenumber $\mu\sigma$ undergoing multiple reflections in the etalon. Since either of these approaches is valid within its context, the change in the signal modulation effected by varying the index of refraction of the material between the two coated surfaces of the etalon hereafter will be called index of refraction scanning. As noted above, index of refraction scanning is usually achieved by changing the pressure of a gas within the etalon gap.

Historically, changing the etalon gap mechanically was used first by employing sliding ways (Fabry and Perot, 1899), or by having the etalon built from two

wedge-shaped substrates which could be moved with respect to each other (Lummer, 1901b), and was supplanted by the more convenient and reliable index of refraction scanning. Mechanical scanning has received considerable attention recently because of the availability of new materials and techniques (Chantrel, 1958; Dupeyrat, 1958; Gobert, 1958; Greenler, 1957, 1958; Chabbal and Soulet, 1958; Roig, 1958; Shepherd, 1960; Ramsay, 1962; Slater *et al.*, 1965; Gadsden and Williams, 1966; Rozuvanova, 1971; Hernandez and Mills, 1973 and references therein) and it is nowadays commonly employed for the scanning of the Jacquinot and Dufour type spectrometer. Combined mechanical and index of refraction scanning has been achieved by heating/cooling a solid material etalon by Burger and Van Cittert (1935) and Auth (1968). Scanning, in the more general approach, includes the movement of apertures, or its equivalent, the presence of multiple apertures, while the etalon itself is held constant. Among the possibilities reported in the literature are the use of varying size apertures (Shepherd *et al.*, 1965; Hoey *et al.*, 1970) multiplexed apertures (Hirschberg and Fried, 1970; Hirschberg *et al.*, 1971; Neo and Shepherd, 1972; Shepherd *et al.*, 1978), axicon prisms (Katzenstein, 1965), as well as the use of multiple apertures with multiple detectors (Hirschberg and Platz, 1965; Shepherd *et al.*, 1965; Chaux *et al.*, 1976), multiple detectors and multiple anode detectors (Chaux and Boquillon, 1979; Sivjee *et al.*, 1980; Abreu *et al.*, 1981; Killeen *et al.*, 1983), to cite a few.

Thus far in the present discussion, it has been implicitly assumed that the detector and recording devices have unlimited bandwidth, that is, the ability to respond to all frequencies equally. When this assumption is not applicable, the resultant recorded profile will be affected, i.e., shifted and broadened. An analytical expression for this effect has been given (Hernandez, 1966):

$$Y(x) = \mathbf{I}\,\mathbf{A}\,\epsilon\,\tau_L\,4\pi f\,{}^{*}n_0^{-1}\,[1-A\,(1-R)^{-1}]^2(1-R)(1+R)^{-1}$$
$$\times\left\{1+2\sum_{k=1}^{k=\infty} a_k\,[1+(kt)^2]\,[\cos(kx)+kt\sin(kx)]\right\}. \qquad 2.4.10$$

In the above expression, x has been used to represent the variable causing the modulation by some arbitrary scanning method, presumed to be linear with time, and t is the time constant of the equivalent RC circuit of the bandwidth limiting circuit which must be expressed in the same units as x. As usual, the a_k represent the coefficients generated by the combination of source, etalon and aperture in a given experiment.

5. Off-axis systems

5.1. Etalon spectrometers

The mathematical treatment given thus far refers to the centered on-axis, or symmetrical, case which is useful for a Jacquinot and Dufour (1948) spectrometer. The off-axis, or asymmetric, behavior is necessary when the Fabry-Perot is used with a television-like detector, a discrete-area solid-state detector, such as a charge coupled device (CCD), etc., when the angle subtended by the smallest effective detector area is not negligible with, say, the free spectral range of the etalon. The above is also equivalent to a microdensitometer examining a photographic plate whose image is a set of Fabry-Perot rings.

This asymmetric behavior has been treated in some detail by Hernandez (1974) for the specific case of a circular aperture whose center is displaced from the Fabry-Perot axis of symmetry. Figure 2.12 shows the particular asymmetric example explored where $\dot{R}$ is the radius of the circular aperture, ρ is the radius of the projected Fabry-Perot rings, on the same plane as the aperture, and Φ is the angle about the axis of the etalon. ρ as well as $\dot{R}$ are better described in terms of angles, and will be treated this way in the following discussion. Note the equivalence of ρ with Θ of the earlier discussion. The displaced aperture then is described in polar coordinates as a circle of radius $\dot{R}$ whose center is displaced by α units from the origin:

$$\dot{R}^2 = \rho^2 + \alpha^2 - 2\,\alpha\rho\,\cos\Phi\ . \qquad 2.5.1$$

For transmission purposes, the useful values of ρ extend from $(\alpha - \dot{R})$ | or zero if $(\alpha - \dot{R}) < 0$] to $(\alpha + \dot{R})$ on the line joining the origin and the center of the aperture. The angle Φ_1, described by ρ_1 in the figure, encompasses a full circle, therefore defining unity transmission, while Φ_2 defined by ρ_2 being less than a full circle, is associated with less-than-unity transmission. Angles associated with values of ρ outside the aperture, such as ρ_3, have, by definition, zero transmission. A transmission can be defined, with unity as a maximum, by:

$$\tau(\rho) = \pi^{-1}\cos^{-1}[(\rho^2 + \alpha^2 - \dot{R}^2)/2\alpha\rho]\ . \qquad 2.5.2$$

Equation 2.5.2) has, in effect, reduced the two dimensional problem, given in Figure 2.12, into a one-dimensional problem as Φ has been defined in terms of ρ. The value of the argument of an inverse cosine is defined to lie within the values + 1 and - 1, yet close examination of the argument of the inverse cosine of Equation 2.5.2) shows it is possible to obtain values outside the defined range. The physical significance of these outside values can be ascertained by using selected values of ρ. For instance, for values like ρ_1, where a full circle is encompassed within the circular aperture, the value of the argument is less than -1, yet by definition, the transmission is unity. Values like ρ_3, found outside the aperture, lead to argument values greater than +1.

temperature variations and chemical substances which affect the mirrors).

For other than visual measurements, a Fabry - Perot instrument will require a lens to project the fringes on a plane where they will be recorded. In photographic applications, this plane is where the sensitive material is located, while for photoelectric recording applications a selection of part of a fringe (or fringes) is made here, ahead of the detector. Thus, in general, a detector-head section needs to be included as part of the instrument. The lack of selectivity of a single Fabry - Perot etalon instrument requires isolation, or filtering, of the desired spectral feature to be measured. This filtering may be simple, or it may consist of other etalons as discussed in Chapter 4. Since Fabry - Perots normally are used in the transmission mode, this configuration will be discussed in some detail. Because of the symmetry of the etalon, the discussion is also applicable to the reflection mode configuration.

2. Practical etalons

2.1. Mirrors and their substrates

Although the final quality of a Fabry - Perot etalon is intrinsically dependent on the substrate-mirror combination, some of the properties of the mirrors and the substrates can be treated separately. For instance, the substrate material must be transparent to radiation at the spectral region where the etalon will be used. Substrates, such as lithium fluoride (*LiF*) (Abjean and Johannin-Gilles, 1970) and magnesium fluoride (MgF_2) (Bidaeu-Mehu *et al.*, 1976), have been used in the far ultraviolet region, fused quartz (Meggers and Peters, 1918) in the near ultraviolet, visible and near infrared regions, glass in the last two regions (Bouloch, 1893; Fabry and Perot, 1896, 1898a; Perot and Fabry, 1898a), rock salt (*NaCl*) (Greenler, 1957) and zinc selenide (*ZnSe*) (Andriese *et al.*, 1979) in the infrared region and metallic grids in the mm and radiofrequency regions (Korolev and Gridnev, 1964; Lecullier and Chanin, 1976). For a given spectral region, the material with the smallest thermal expansion coefficient is to be preferred, as it simplifies the control of the ambient temperature, leading to better stability of the etalon. The use of fused quartz is nearly universal in the visible region, because this material combines a low thermal expansion coefficient with high optical transparency.

A most important property of the substrate material is its ability to be polished to a high degree of flatness, approaching the ideal perfectly flat surface. This property must be coupled with high mechanical stability in order to retain the highly polished surface figure indefinitely, regardless of the position of operation. Marioge (1971) has studied the behavior of substrates used in Fabry - Perot etalons under mechanical stress and defined this behavior. The substrate is usually made

mechanically stiff by fabricating on a massive size, the empirical rule being a diameter-to-thickness ratio of at least 4 to 1 for fused quartz. This empirical rule is supported by Marioge's investigations. The polished substrates are usually known as 'flats', and it is common practice to specify their mechanical position of operation when purchasing them as the final surface figure is dependent, to a small degree, on this factor. As discussed in Chapter 4, the surface finesse factor is quite critical for multiple-etalon operation and every small gain in the final surface figure is useful.

Another property, directly associated with the substrates, is homogeneity, not only in such obvious things as being free of foreign embedded material, but in the index of refraction of the material as well, since the etalon-delayed beams must pass through this medium essentially undisturbed. A simple estimate of the tolerable index of refraction inhomogeneities of a given substrate can be made easily. If these inhomogeneities are presumed to behave as a wedge prism, which deviates the light by a prescribed (tolerable) amount, the approximate solution is:

$$\Delta\mu \; \mu^{-1} = \delta \; \mu \; (2 \; n_0 \; \Delta n \;)^{-1/2} , \qquad 7.2.1$$

where μ is the index of refraction of the substrate, δ is the prescribed tolerance (in orders), n_0 is the value of the central order [cf. Equation 2.1.9)], and Δn is the number of orders away from the central order where the tolerance is desired. As would be expected, the tolerances become smaller as the operating order becomes larger or when off-axis measurements are desired, since the angular separation between fringes become smaller in both cases. As an example, consider a photographic measurement of wavelength, or Doppler shift, with an etalon operating at $n_0 = 50\,000$ and where an arbitrary tolerance of 10^{-2} orders is acceptable. This tolerance is equivalent to 2 mK or 30 m/s precision (at 20 000 K) respectively. The degree of acceptable inhomogeneity is found from Equation 7.2.1) to be 5×10^{-5}, when the measurement is made one order away from the central order. If the same measurement is to be made at 0.1 order and 10 orders away, the acceptable inhomogeneity is 1.5×10^{-4} and 1.5×10^{-5} respectively. The tolerance results derived above apply to the total thickness of the substrate, that is, as the flats become larger in diameter (and thicker) the tolerance per unit thickness becomes stiffer. Note that for an otherwise-perfect etalon of 0.92 reflectivity, a tolerance of 10^{-2} orders is slightly less than one-third of the instrumental width a' of Equation 2.1.12a).

The degree of flatness to which a polished substrate can be obtained commercially seems to be limited to about $\lambda/200$ ($\lambda = 632.8$ nm) in the visible. Flats to this tolerance are offered with diameters up to 15 cm. This form of specifying flatness, in terms of λ/m, is quite useful as it is already in the proper units as utilized. However, note this specification is wavelength-dependent. The flats are usually matched sets, where the errors of polishing of one flat tend to cancel those of the other (Rayleigh, 1906). The actual surface finesse attainable from such flats

depends on the specifications of the surface defects. As discussed in Chapter 2, Section 3, the finesse is quite sensitive to the type of defects present. When the dominant effect is curvature of the substrate, the surface finesse is given in Equation 2.3.5) to be equal to $m/2$, while for predominant micropolish defects, the surface finesse is, by Equation 2.3.3), equal to $m/4.7$. Using the previous flatness figure of $\lambda/200$, or $m = 200$, the resultant surface finesse is either 40 or 100 depending on the type of polishing error present. According to the LRP criterion, as given in Figures 2.8 and 2.9, optimum operation of an etalon would occur for a reflective finesse equal to the surface finesse. For the example given above, this corresponds to reflectivities of 0.97 and 0.92 for spherical curvature and micropolish surface defects respectively. Note that the magnitude of spherical curvature defects is aperture-dependent, while micropolish defects are not. Thus, no appreciable improvement is to be expected by masking down an etalon characterized by micropolish surface defects.

As shown by Pelletier *et al.* (1964), Koppelmann and Schreck (1969) and Hodgkinson (1972), to name a few, the final degree of flatness of the substrates can be further improved by judicious coating of the substrate prior to mirror deposition, or as part of the mirror deposition process proper. For the usual Fabry-Perot, the mirrors are applied onto two separate flat substrates in order to allow for flexibility of operation, such as changes of the free spectral range. When this is not the case, the mirrors can be coated on both sides of a single substrate and thus a monolithic, or 'solid', Fabry-Perot etalon is obtained (Jobin, 1898; Fabry and Perot, 1899).

The mirrors to be deposited on the substrates must satisfy many requirements. The first of these is the attainment of some specified reflectivity, over an arbitrary region of the spectrum, with the least amount of light loss. In addition, this mirror must be durable, should not permanently affect the substrates and yet be removed easily when the need arises. Historically, silver coatings were the first to be used (Fabry, 1923), as they satisfy most of the requirements set for semi-transparent mirrors, except possibly those of transparency or light loss. As would be expected, the reflectivity of silver mirrors increases as the thickness of the deposited silver increases; however, the transmission of this layer decreases very fast due to absorption by the metallic layer (Tolansky, 1946, 1947, 1955), making the $[1-A(1-R)^{-1}]^2$ term of Equation 2.1.7b) of considerable importance. For most applications, a reflectivity near 0.75 represents a reasonable compromise between the transparency of the coatings and the reflective finesse (Tolansky, 1947). The reflective power of silver is quite high over the near infrared and visible spectra, and starts decreasing in the near ultraviolet due to an absorption band of the metal. In this last region the metal of preference is aluminium (Burridge *et al.*, 1953; Bates and Bradley, 1967), even though its transmission characteristics are far from ideal. Although other metals, such as gold (Babcock, 1923) and tellurium (Greenler, 1957), have been used, the previously mentioned silver and aluminium mirrors remain the most useful pair (Tolansky, 1955). The practical deposition of metallic coatings is by evaporation and

sputtering (Fabry, 1923; Tolansky, 1947), and the reader is referred to these authors for details on the coating techniques. The metallic coatings, as well as other coatings, tend to adopt the shape of the surface where they are deposited, thus explaining the need for high-quality substrates.

The introduction of multilayer dielectric coatings nearly eliminated the absorption-limiting factor of metallic coatings. The ability to obtain very high reflectivities, with very small transmission losses, allows for potentially high etalon finesses. As discussed earlier in Chapter 2, high etalon finesse is limited by the surface finesse to the extent that the latter is described as the limiting finesse. As these multilayer coatings, as implied by their name, require the deposition of more than 5 layers (Born and Wolf, 1964), the potential to alter the apparent surface quality by accident or by planning becomes available (Pelletier *et al.*, 1964). Although the basics of multilayer stacks are well known (Born and Wolf, 1964), the field of multilayer coatings is better discussed elsewhere (Dobrowolski, 1978). For the purposes of the present discussion, a multilayer dielectric coating consists of a stack of alternately high and low index of refraction layers each one-quarter wavelength thick. For such stacks, the reflectivity will be high over a limited range about the specific λ where the layers have the $\lambda/4$ optical thickness. This wavelength sensitivity of dielectric mirrors limits the range of their spectral usefulness to a region about 70 nm about the design wavelength. This range of usefulness can be extended by coating more than one stack with a different design center wavelength, or by a thicker stack of varying thickness layers such that the final effect is a broadband coating (~ 300 nm bandwidth) (Baumeister and Stone, 1956; Netterfield *et al.*, 1980). The presence of many layers has the enhanced possibility of changing the effective surface quality of the finished product (Giacomo, 1958).

Since the deposition of multilayer coatings is by evaporation of suitable materials, the resultant stack then is composed of amorphous material. When deposition occurs onto a relatively cool substrate, a 'soft' coating is obtained, which has the advantage of ease of removal but can be scratched easily. Hot substrate deposition gives a 'hard' coating which adheres tenaciously to the substrate, due to the partial melting and crystallization of the layer material(s), and which also has the ability to stress the substrate upon cooling, since the thermal expansion coefficient of the layers is unlike that of the substrate. A possible side-effect of hot deposition of these 'hard' coatings is to release internal strains of the substrate with the ensuing likelihood of degrading the surface quality.

The dielectric materials more commonly used in the visible are zinc sulfide, ZnS, and cryolite, Na_3AlF_6 (sodium fluoaluminate), for the high and low index of refraction layers respectively. Cryolite is hydrophilic, which requires some care in the handling of the mirrors, since the swelling by moisture of coatings containing cryolite is not fully reversible upon drying. A protective coating (usually thorium oxyfluoride, $ThOF_2$, or thorium fluoride, ThF_4) over a multilayer coating decreases

problems with humidity. This protective coating is more effective when the mirror coating is smaller than the substrate, because of the edge-sealing effect by the overcoat on the mirror stack. Metallic films can be 'enhanced' by coating with dielectric materials, although this technique seems to be more useful with interference filters (Turner, 1950). Other materials used for dielectric multilayer coatings have been: aluminium fluoride, AlF_3; antimony oxide, Sb_2O_3; antimony trisulfide, Sb_2S_3; cadmium sulfide, CdS; calcium fluoride, CaF_2; cesium monoiodide, CsI; cesium monobromide, $CsBr$; cerium dioxide, CeO_2; lead sulfide, PbS; lead fluoride, PbF_2; lead chloride, $PbCl_2$; lead selenide, $PbSe$; lead telluride, $PbTe$; indium antimonide, $InSb$; magnesium fluoride, MgF_2; potassium bromide, KBr; rubidium iodide, RbI; silicon monoxide, SiO; silicon dioxide, SiO_2; sodium chloride, $NaCl$; stannous oxide, SnO; titanium dioxide, TiO_2; molybdenum trioxide, MoO_3; tungsten trioxide, WO_3; silicon, Si; germanium, Ge; and tellurium, Te. Some of these are more useful in regions like the ultraviolet and the infrared, rather than the visible (Heavens, 1960).

As discussed earlier, the process of deposition of dielectric multilayer coatings leaves an amorphous material stack, which will have a finite amount of both forward and backward scattering of the incoming illumination (Giacomo, 1956a, b). Similar behavior was observed also by Fabry and Perot (1897) for silvered surfaces. This scattering proceeds from the combination of the scattering from the microstructure of the layers' surface and from the bulk amorphous material. The main effect of scattering in multilayer mirror coatings is similar to that observed with metallic coatings, namely a loss in the transmission of the etalon, but of a much smaller magnitude. The associated coefficient A is small, about 0.005, and its effect does not become appreciably important until reflectivities near unity are desired. Since this light scattering redistributes the light, its more important effect is a reduction of the contrast an etalon can deliver. The use of 'hard' coatings diminishes the scattering problem. Although, from the discussion of Chapters 2 and 5, it is possible to determine the required reflectivities for a given etalon, the article by Davis (1963) on the selection of dielectric coatings should be consulted, since it provides practical advice.

As briefly mentioned earlier, the coating process places a stress on the coatings and substrates (Ennos, 1966), which will degrade the quality of the etalon mirrors (Killeen *et al.*, 1982). Ennos (1966) found certain combinations of materials to have the least residual stress when used as multilayer coatings. $ThOF_2$ - ZnS coatings had the best properties of the many coatings he investigated.

2.2. Etalon internal reflections and scatter

The requirement of etalon mirror substrates, each with finite thickness, has some disadvantages. The most obvious of these is the appearance of extraneous

etalons, which are formed by the reflections between the mirror-coated sides and the backsides of each flat, due to the finite reflectivity of the backside-air interface. These extraneous etalons are rendered ineffective either by reducing the backside reflectivity with anti-reflection coatings (Killeen *et al.*, 1982) or, more commonly, by simply fabricating each of the substrates with varying thickness, i.e., a wedge, and thus forcing the extraneous etalons to be out of adjustment (Tolansky, 1944). Needless to say, when the substrate is wedge-shaped and the backside is anti-reflection coated, the effects of the extraneous etalons can be made arbitrarily small. As would be expected, the present and following discussion is only applicable to an etalon made up of two substrates since, for a solid etalon, consisting of one substrate coated on both sides, the present effects are non-existent.

Although the extraneous etalons formed by the presence of slightly reflective substrate backsides can be reduced to a negligible level, by having a wedge-shaped thickness substrate, the back surface still is present with a small, but finite, reflectivity. As discussed by Mrozowski (1941), Tolansky (1944), Dufour (1951) and Georgelin (1970b), the effects of the substrate backside reflectivity can be separated into two categories, depending on the location of the backside with respect to the incoming light into the etalon. This is shown schematically in Figure 7.1 for an etalon consisting of two substrates with an arbitrary thickness wedge characterized by the angle Φ. Figure 7.1a illustrates the effects of reflection on the etalon when the substrate has its backside closer to the source. In this example, as well as in the following discussion, refraction by the substrate material will be ignored. In the absence of reflection at surface A, a beam from source S will be partially transmitted, indicated by SO, and partially reflected, indicated by SBP, in the same fashion as described in Chapter 2, Section 1. However, in the presence of reflection at surface A, a new beam, indicated by $SBAQ$, has appeared, making an angle of $2\,\Phi$ with respect to SO. The final effect of the reflection from A is to increase the illumination at an angle $2\,\Phi$ away from the original beam. Note that this illumination adds to the illumination already present in that direction and it contributes to the one ring pattern formed by the etalon. For an extended source, this is of little consequence, as the final illumination is evenly spread, but for a collimated source, such as that from a spectrograph slit (Tolansky, 1944), this redistribution of the illumination acts as if there were a secondary slit apart from the main slit by the angle $2\,\Phi$, giving rise to the appearance of a weak secondary fringe pattern concentric with the main fringe pattern, but with maximum brightness at $2\,\Phi$ away from the main pattern. When this secondary reflection occurs at an air-glass interface, with a reflectivity of about 0.04, the increase in brightness incurred is about 3 %.

Reflections from the etalon substrate with its backside farthest from the source are illustrated in Figure 7.1b. Again, one finds a secondary beam $S'Q$ forming an angle $2\,\Phi$ away from SO, except that for each incoming ray SO there is a large number of (delayed) rays leaving the etalon, which will be partially reflected and

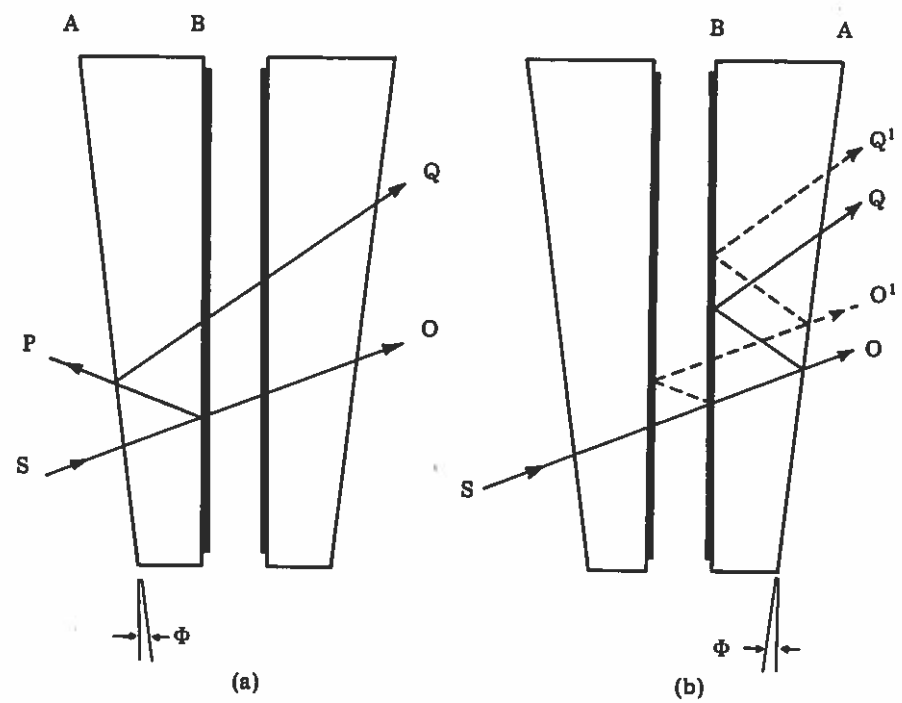

FIGURE 7.1. Formation of ghost images in an etalon with finite thickness substrates: a) substrate backside nearest to the source; b) substrate backside farthest from the source.

shifted in direction, as is the main ray. Since the rays, reflected by the substrate backside, have the same properties as those rays associated with the main ray (except intensity and direction), the resultant effect is a set of fringes displaced by an angle 2 Φ from the main fringe pattern (Mrozowski, 1941; Tolansky, 1944). For an uncoated glass substrate, the relative intensity of the displaced ghost fringe pattern is about 3 % of the main pattern and, as has been seen earlier, the angular position relative to the main pattern is dependent on only the wedge angle of the substrate. Note that this ghost pattern is a property of the etalon and it appears regardless of the source geometrical parameters.

Similar effects to those described above for the etalon substrate also occur when an interference filter is used as a pre-filter for an etalon spectrometer (Georgelin, 1970b). However, in this case, the reflectivity of the interference filter is much higher than a simple glass-air interface, and the relative brightness of the ghosts are a larger proportion of the main fringe pattern. Also, since interference filters are

usually inclined with respect to the optical axis (in order to tune them for maximum transmission, cf. Chapter 2, Section 5.2), the angular location of the ghost patterns is no longer a constant of the etalon, as it was for the substrate backside reflections. As would be expected, the presence of ghosts is found also in multi-etalon devices (Mack *et al.*, 1963), where the etalon coated surfaces serve the same function as the etalon substrate backsides and interference filter just discussed.

As Tolansky (1944) has shown, the contamination of the desired spectrum by the ghost pattern can be removed, for the specific case of an etalon in front of an spectrograph, by using collimated light and properly wedged etalon substrates, such that the ghosts are projected away from the slit. The same method can be used for a Fabry-Perot spectrometer in the Jacquinot and Dufour (1948) single aperture configuration and its multiple-etalon extension, or PEPSIOS device discussed in Chapter 4, Section 3.

When etalon devices are used for imaging purposes, usually with interference filters as pre-filters, the ghosts cannot be eliminated, and one must deal with their presence. In photographic applications, the simplest solution is not to use that section of the record where the ghosts have been projected. By proper positioning of the etalon substrates wedges and other reflections, such as those caused by interference filters in the system, the ghosts can be located at an arbitrary section of the record where they will be ignored. For those imaging applications where radial symmetry detectors are used (Killeen *et al.*, 1983), and the presence of off-center ghosts cannot be tolerated, the solution has been to have no wedge in the substrate so that the ghosts are concentric with the main pattern, and to anti-reflection coat the etalon backsides to make the ghosts as weak as possible. This approach simply minimizes the contribution of the ghost images as long as they must be tolerated. Note that simple masking of radial symmetry detectors will accomplish the same effect as ignoring part of a photographic record, and then the usual wedged-substrate etalons can be used.

For the specific cases of an etalon illuminating a spectrograph, or a single aperture Jacquinot and Dufour (1948) etalon spectrometer, the etalon substrate wedge should be made large enough so that the ghosts are displaced by a nominal two to three times the angular spread of the fringe pattern actually used. As the reader is aware, the latter depends on the central order of operation, the reflectivity of the coatings and the width of the (line) source under investigation. The following example will give an idea of the wedge necessary to avoid significant ghost contamination in a single-aperture Fabry-Perot spectrometer. Assume an etalon operating order of 50,000 where the scanning aperture will examine an (arbitrary) 0.1 order. The half-angle associated with this aperture then is found to be, from Equation 2.1.8), about 7 minutes of arc. Thus, if the wedge angle of the substrate thickness is made to be 30 minutes of arc, the ghost images will be displaced from the main image by approximately twice the diameter of the aperture. On the other hand, if the

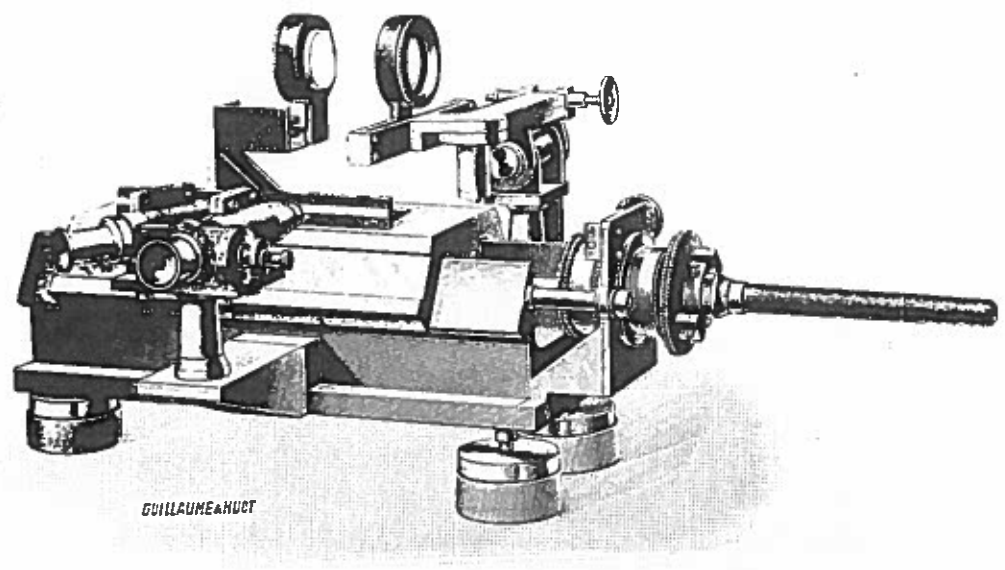

FIGURE 7.2. The original interferometer built by Jobin for Fabry and Perot. From Benoit *et al.* (1913). Courtesy of P. Giacomo, Bureau International des Poids et Mesures.

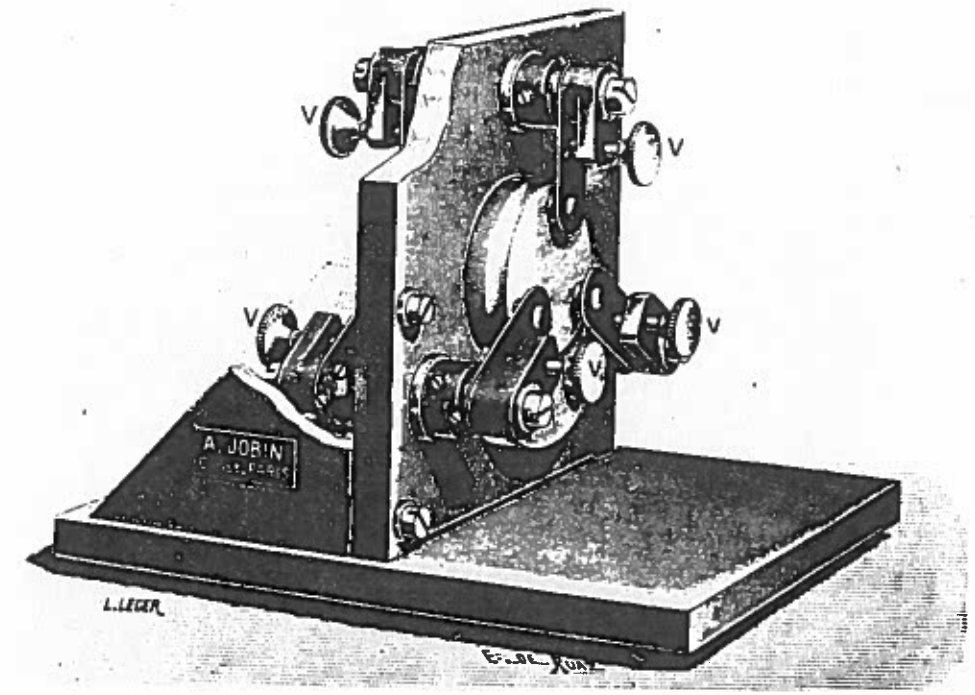

FIGURE 7.3. Fabry and Perot's étalon. Fabry and Perot (1902a).

operating order was to be 5,000, rather than 50,000, the wedge angle of the substrate thickness would need to be one and one-half degrees to give the same separation.

As Tolansky (1944) noted, scattered light by reflections in instrumentation containing etalons can undo the efforts made in removing the etalon ghosts. Etalon windows, lenses, lens cells, etc., are usually the main culprits. A little care in the design stage, anti-reflection coating of transmission elements, and careful baffling of the optics and the light sources allow attainment of near-ideal Fabry-Perot devices.

3. Spacers and etalon support

In the same manner as the substrates and mirrors previously described, the etalon spacers and the etalon support are closely related and will be discussed together. In the limiting cases the spacers can become the etalon support, and the support can become the spacing as well. Historically, (Jobin, 1898) there existed no spacer as such, and this is shown in Figure 7.2 for the original interferometer of Fabry and Perot. Physical spacers appeared when Fabry and Perot (1897) required an

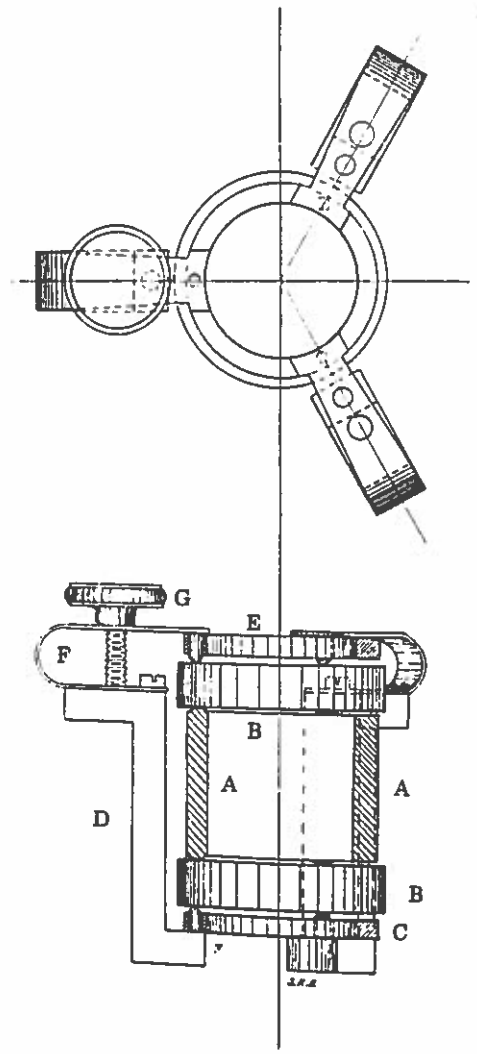

FIGURE 7.4. Rayleigh's tube spacer etalon. Rayleigh (1908).

étalon or interference gauge (Rayleigh, 1906) and this interference gauge is given in Figure 7.3. Although not shown in the figure, the spacing between the silvered glass plates is defined by three steel rods. The adjustable pressure springs, shown in both front and back, were used to compress slightly the steel rods in order to reach near-perfect parallelism and stabilization of the overall assembly. To this day, the use of adjustable pressure devices is still commonplace. Other spacers used have been bicycle ball bearings (Fabry, 1923). Ball bearings are made to close tolerances of 2λ - 5λ (Fabry, 1923; Tolansky, 1947) and presently are available to λ / 8 tolerances. Bent tungsten wires (Mewe and de Vries, 1965) have also been used as spacers.

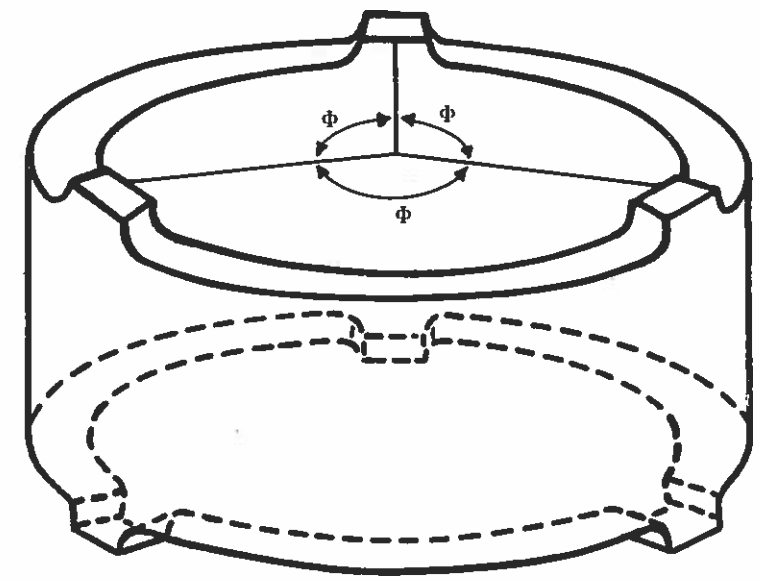

FIGURE 7.5. Contemporary etalon spacer. After Phelps (1965).

Later etalons used invar spheres and shaped invar rods as spacers (Rayleigh, 1908; Pfund, 1908) because of the low thermal coefficient of expansion of this alloy. Also at that time, Rayleigh (1908) introduced the use of (glass) tubing spacers with three equally spaced and parallel protuberances at the ends. Rayleigh's etalon, with the tubing spacer, is given in Figure 7.4. Note again the spring assembly used to compress the spacer to attain parallelism. This design by Rayleigh is the most commonly used spacer configuration for etalons (Meissner, 1941, 1942; Phelps, 1965). A modern version of this type spacer is illustrated in Figure 7.5. Present day Rayleigh-type spacers use Zerodur as the basic material because of its extremely low thermal coefficient of expansion (Killeen *et al.*, 1980). Figures 7.6 and 7.7 illustrate two contemporary versions of the etalon supports.

For those etalons where it is necessary to have access to the internal cavity, the design of Benoit *et al.* (1913) in Figure 7.8 is quite useful. The collection of etalons used by these workers in the determination of the meter are given in Figure 7.9. The use of quartz as a spacer material was reported by Meggers and Peters (1918) in

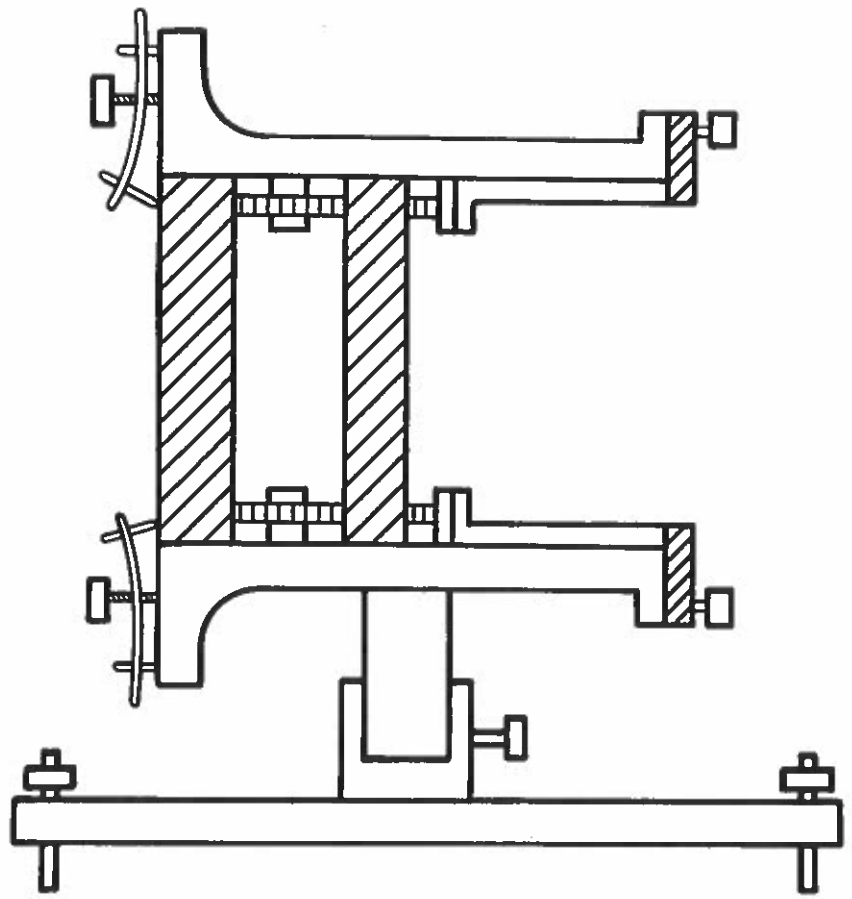

FIGURE 7.6. Laboratory etalon. After Tolansky (1947).

their original determination of the index of refraction of air. A very sturdy etalon design evolved from the work of Sears and Barrell (1933). A schematic diagram of this design is given in Figure 7.10, where the screw and wire assemblies found between the collars are used to compress the portion between the collars. The mirrors are wrung to the ends of the invar assembly, after the ends of the latter are coated with a harder metal than invar which will allow lapping and polishing of surfaces suitable for wringing. This design is a good example of the spacer becoming the etalon support. The stability gained by wringing the mirrors to the substrates was quickly appreciated (Jackson and Kuhn, 1935; C. V. Jackson, 1936), and has been

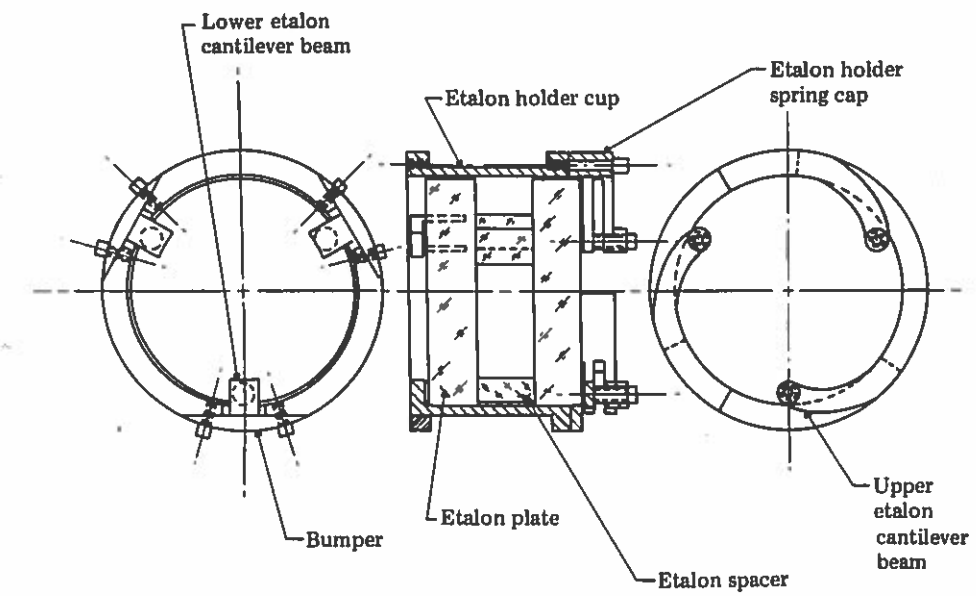

FIGURE 7.7. Modern etalon assembly. Hays *et al.* (1981).

carried farther into optically contacted etalons which offer rigidities approximating those of the solid etalon originally used by Fabry and Perot (1899), yet are simpler to fabricate. Also, in this design, the difficulty of obtaining a uniform optical thickness material is avoided, since the spacer material is now air or vacuum. An example of this design (Bates *et al.*, 1973) is illustrated in Figure 7.11.

Although, for most applications, a fixed spacer is satisfactory, there are some spectroscopic investigations where it becomes necessary to change the etalon gap by many small increments. In these cases, an infinitely variable etalon gap, such as that shown in the interferometer of Figure 7.2, is eminently suited. Chabbal and Jacquinot (1961) have designed a very stable variable-spacing support and spacer, which is given in Figure 7.12. Another solution for the infinitely variable spacer is the use of air bearings (Barrett and Steinberg, 1972).

Previous to Jacquinot and Dufour's (1948) introduction of photoelectric recording, the majority of the measurements with Fabry - Perot interferometers were made photographically. The use of this technology requires long-term stability of the etalons, a necessity encountered because of the relatively long exposure times used in the measurements. Because of the spatial resolution of photographic materials, the angular location, thus its projection, of a given Fabry - Perot fringe is not as important as is its stability. Only when more than one etalon was used, it did become

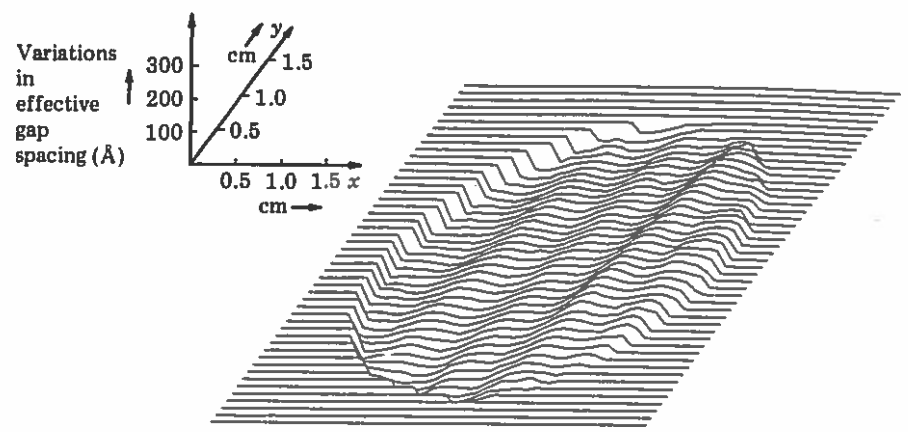

FIGURE 7.37. Contour map of the variations in effective gap spacing of an etalon. (Killeen *et al.*, 1981). Courtesy of T. Killeen, University of Michigan.

same result as Herriott (1961), but with only a single wavelength source. With these methods of measurement, determination of departures from flatness of about $\lambda/100$ are attainable with some care.

The second method of measurement was pioneered by Duffieux (1932), and consists of a visual or photographic measurement of the mirrors through the aperture used to do the equal-thickness fringe alignment. When using a narrow source (in practice, a source narrow relative to the etalon free spectral range), the observed illumination of the mirrors, as the etalon is scanned, does not change evenly, as an ideally perfect pair of mirrors would be expected to do. This uneveness of illumination can be translated into absolute units, since the relationship between the scan of the etalon and changes in the gap are well known. Koppelmann and Krebs (1961a, b) improved on this technique by the inclusion of photometric techniques. They place a small aperture in back of the etalon exit aperture, and sample the etalon area by moving the small aperture. The rest of the instrument is a Jacquinot and Dufour (1948) single aperture spectrometer. This method is essentially a photometric version of Molby's (1936) alignment scheme. A more sophisticated improvement has been used by Killeen *et al.* (1981), using an image dissector as the detector. With their arrangement, the total aperture of the etalon is examined at once and there is no loss of contrast as in the previous method when the etalon is masked down by the small aperture. A contour map of an etalon measured with the image dissector arrangement is illustrated in Figure 7.37. The work of Koppelmann

and coworkers (Koppelmann and Schreck, 1969; Koppelmann *et al.*, 1975) and the review of Schultz and Schwider (1976) should be consulted on the details of measurement of surface defects of mirrors used in Fabry - Perot etalons. For practical use, the arrangements of Koppelmann and Krebs (1961a, b) or Killeen *et al.* (1981) are the most convenient for routine tests of mirror departures from flatness, as well as for calibrating the capacitive-micrometer aligned etalons.

7. Reflectivity

In the early days of Fabry - Perot interferometers, an accurate knowledge of the reflectivity of the mirrors was not as important as the need for reasonable transmission through the etalon. Nevertheless, the need eventually did arise and Fabry and Buisson (1908b) reported a method to measure directly the reflectivity by employing a polarizing birefringent element and an analyzing polarizer. Their method takes advantage of the observation that two slightly wedged mirrors, when illuminated by a collimated source, will show a series of images of the source, but of decreasing intensity. The intensity relationship between consecutive images is given by the two reflections of the light involved in making the images. Using a birefringent element, such as a Wollaston prism, to look at these multiple images, will split the images, giving rise to a new set of images slightly displaced from the original ones. When these images are examined with an analyzing polarizer, there exists a null point where the observed intensities are equal for images which have undergone an equal number of reflections. Rotation of the analyzing polarizer will change the relative intensities of the double images and, as such, members of the double images with different number of reflections can be matched in intensity. As Fabry and Buisson (1908b) have shown, the relationship between two images separated by two reflections and the rotation, β, of the polarizer to make these two images of equal intensity is:

$$R^2 = \tan^2(\beta) \ . \qquad 7.7.1$$

Since the mirrors, in general, have unequal reflectivities, the measured quantity is $R_1 \times R_2$, where the subscripts indicate the individual mirrors.

As discussed in Chapter 2, Section 2, Giacomo (1952) used the response of an etalon to a very wide line to determine the reflectivity of the etalon. The ratio of the radiation observed with and without the etalon in the path is given by Equation 2.2.26), namely:

$$Y = [1-A\,(1-R)^{-1}]^2\,(1-R)\,(1+R)^{-1} = \tau^2\,(1-R^2)^{-1} \ , \qquad 7.7.2$$

since $1 = A + \tau + R$. Thus, R is given by:

$$R = (\,1 - \tau^2\,Y^{-1}\,)^{1/2} \ , \qquad 7.7.3$$

where both Y and τ are measurable quantities. τ is the transmission of each

individual mirror and thus $r^2 = r_1 \times r_2$. As Giacomo pointed out, the determination of R by this method has larger uncertainties as the value of the reflectivity approaches unity. This method has the convenience of measuring the complete etalon aperture at once, rather than a small area; thus, the measurement is representative of the etalon as used. Like the Fabry and Buisson (1908b) method, the Giacomo method just described is independent of the quality of the surface of the mirrors.

Another method used in the determination of reflectivity is that sketched in Chapter 3, Section 2, in regard to the determination of the instrumental function. Briefly, the Fourier coefficients, a_k, derived from a measured fringe, are of the form given in Equation 3.2.25), or:

$$a_k = d_k \times s_k \,, \qquad 7.7.4$$

where d_k and s_k are the instrumental and source coefficients respectively. If the source is truly monochromatic, the contribution of s_k to a_k is zero, and a measurement of such a source will result directly in d_k. For a practical source, the contribution of s_k can be made as small as desired by increasing the free spectral range, i.e.:

$$\lim_{\Delta\sigma \to \infty} a_k = d_k \,, \qquad 7.7.5$$

since the contribution of the source is proportional to the ratio of the source HWHH to the free spectral range, $\Delta\sigma$. Thus, measurements of a source when the free spectral range is very large, are a fair representation of the instrumental function. When such measurements are made with a Jacquinot and Dufour (1948) spectrometer with a very small exploring diaphragm, the effect of this small diaphragm on the determined coefficients will be negligible, and therefore, these coefficients are a good representation of the etalon function alone. For the most common mirror surface defects, namely micropolish inhomogeneities and errors of curvature, the explicit forms of d_k can be obtained from Equations 2.3.1) and 2.3.6), or:

$$(d_k)_G = R^k \exp(-k^2 G^2) \,, \qquad 7.7.6$$

$$(d_k)_D = R^k \operatorname{sinc}(k\ 2\ df_D^*) \,, \qquad 7.7.7a$$

where $G = \pi\ df_G^*\ [\ln(2)]^{-1/2}$. For small values of df_D^*, such that $2\,k\ df_D^* \leqslant 0.5$, the sinc function can be expressed by a standard approximation (Zucker, 1964), and the coefficients for the etalon become:

$$(d_k)_D \simeq R^k\ [\,1 - 0.1666666664(2\pi k\ df_D^*)^2 + \ldots]\,. \qquad 7.7.7b$$

The logarithms of the instrumental Fourier coefficients are then expressed as:

$$\ln(d_k)_G = k\ \ln(R) - k^2\ G^2 \,, \qquad 7.7.8$$

$$\ln(d_k)_D \simeq k\ \ln(R) - k^2(\,0.1666666664\ 2\pi\ df_D^*)^2 - \ldots \qquad 7.7.9$$

Since both Equations 7.7.8) and 7.7.9) have the same second order form, the value of R can be obtained by a least squares solution of equations of the form $a + bx + cx^2$, where $b \equiv \ln(R)$. In practice, the conditions of Equation 7.7.5) are not rigorously met, and the approach taken is to obtain measurements at increasing $\Delta\sigma$ (or decreasing etalon gap). Fourier coefficients are determined from these measurements (Bennett, 1978; Mar *et al.*, 1979), and from these coefficients the values of $\ln(R)$, as outlined above, are obtained. The desired value of R is that value resulting from extrapolation of $\ln(R)$ to zero spacing gap (Mar *et al.*, 1979). Note that the same process can be carried out for the surface defect contribution, as long as it is small for the case of df_D^*. In addition to having the ability to measure the overall etalon aperture, as in the Giacomo (1952) procedure, this method has the advantage of using the etalon and a laboratory source as the only equipment for the determination of reflectivity.

8. Materials

In the previous sections, dealing with substrates, spacers and etalon supports, explicit and implicit assumptions were made in regard to the existence of materials with thermal properties suitable for the construction of etalons. As discussed earlier, the mirror substrates present the most serious limitations in the fabrication of etalons, as these substrates should be transparent, homogeneous and must take and keep a polish. The material that best fits the above requirements is fused silica, at least for the near ultraviolet, visible and near infrared regions of the spectrum.

The thermal expansion coefficient of a given material, α, is defined as (Berthold and Jacobs, 1976):

$$\alpha = \frac{1}{L}\frac{dL}{d\tau} = \frac{1}{\Delta\tau}\left(\frac{\Delta L}{L}\right), \qquad 7.8.1$$

where L is the length and τ is the temperature. Berthold and Jacobs (1976) have reported a comprehensive study of the thermal expansion coefficient of materials normally used in the construction of Fabry-Perot devices. Near room temperature (20 °C), they report a thermal expansion coefficient (in units of 10^{-8} °C^{-1}) of ~ 50 for fused silica, ~ 45 for invar LR35, ~ −20 for Super Invar, ~ 3 for Zerodur, ~ −1.5 for ULE-7971 and ~ −5 for Cer-Vit 101, where the last three are ceramic materials. Some of these results have been confirmed by Killeen *et al.* (1982) with the etalons built for the Dynamics Explorer satellite experiment. As can be seen from the above-mentioned thermal expansion coefficients, the use of ceramic materials for the etalon spacers tends to make the etalon gap rather insensitive to temperature changes (Rees *et al.*, 1982). Careful design of the etalon support will decrease

further the effects of temperature changes of the completed instrument (see for instance, Killeen *et al.*, 1982).

9. Selecting a Fabry-Perot

In order to summarize some of the material presented thus far, as well as to provide a rudimentary guide on the selection of a Fabry-Perot spectrometer, an example drawn from the author's investigations will be used.

For this particular exercise it will be assumed that measurements of the night-time upper atmosphere dynamics and physics are desired, specifically near 100 km height. At this altitude chemical reactions give rise to the emission of light at 17924 K due to the ($^1S_0 - {}^1D_2$) transition of atomic oxygen (Chamberlain, 1961). To avoid unnecessary detail, the properties of this radiation will be stated without further justification. The 17924 K emission proceeds from a highly forbidden transition, thus of negligible damping width, while the kinetic temperature in that region of the atmosphere is near 200 K; therefore, the emission can be considered to be an ideal Doppler-broadened line. The expected horizontal motions, i.e., Doppler shifts, are not much larger than 50 m/s, while vertical motions are negligibly small. Also, for the purposes of this exercise, the radiation proceeds from a homogeneous extended source and has no neighboring, or contaminating, emission. The zenith emission rate of the 17924 K line is 100 R (1 Rayleigh = 4π I, where I is expressed in units of 10^6 photons cm^{-2} sec^{-1} $sterad^{-1}$), but it is necessary to measure this emission at a large zenith angle in order to determine horizontal motions. This method of observation increases the apparent emission rate by a factor of about two, relative to the zenith, since a finite thickness emission layer is being observed at an angle other than perpendicular. This is the so-called van Rhijn (1919) effect. Finally, it is considered necessary to measure simultaneously both the temperature and the horizontal motions with a precision of 10 K and 5 m/s and with a time resolution better or equal to 10 minutes. A Jacquinot and Dufour (1948) single aperture Fabry-Perot spectrometer appears to be suitable for this measurement, since the emission line has no special filtering requirements. For the measurements, the equidistant equal-time sampling method of Chapter 3, Section 2.1 will be employed.

The optimum points of operation for a normalized spectrometer have been derived from Equations 3.2.24) and 3.2.23) and the operational quantities a^*, dg^*, f^*, and N for the optimum, or least uncertainty, operation are given in Figures 3.2 and 3.3 and summarized in Figures 3.4 through Figure 3.8. As discussed in Section 2.1 of Chapter 3, when simultaneous wind and temperature measurements are desired, it is necessary to use the more restrictive parameters needed for temperature determinations. The values for these parameters are found to be as follows: etalon normalized width $a^* = 0.035$ (thus, automatically giving a reflectivity of 0.80); normalized source width profile $dg^* = 0.11$; scanning aperture normalized width $f^* = 0.065$; and N, or the minimum number of coefficients necessary to unambiguously describe a measurement in its Fourier representation, is equal to 7. Since both the expected temperature and the optimum value of dg^* are given, the value of the free spectral range $\Delta\sigma$ is therefore fixed by the relationships given in Equations 2.1.10a) and 3.2.26), or:

$$\Delta\sigma = \sigma\ (c\ dg^*)^{-1}(\ 2\ \tau\ k\ A\ M^{-1}\ \ln 2\ )^{1/2}\ , \qquad 7.9.1$$

while the order number, n_0, and the etalon spacing, d, are found from Equations 2.1.10a) and 2.1.10b). For the present example, the values of the free spectral range, order number, and etalon spacer are then 0.206 K, 86,960 and 2.424 cm, respectively. The value of T in Equations 3.2.24) and 3.2.33) is equal to 2N = 14 for critical sampling, while a quantum efficiency of detection $\epsilon = 0.10$ is a reasonable value to assume in this region of the spectrum. Finally, the transmission τ_L, associated with miscellaneous light losses, will be considered first to be equal to unity, which will give the smallest etalon possible to reach the measurement objectives.

The minimum (normalized) uncertainty for temperature determinations is found from either Figure 3.3 or Figure 3.4 to be, in round numbers, equal to 14, while the (normalized) uncertainty for the winds for the same parameters is found in Figure 3.2 or Figure 3.4 to be about 10^9. Note, however, that these numbers are given as standard deviations, not variances as required by Equations 3.2.24) and 3.2.33). Although, from the discussion of Section 2.1 of Chapter 3, it is known that the temperature is the more restrictive of both the desired measurements, the calculations of this exercise will be carried for both temperature and wind determinations. Since the only unknown left is the area of the etalon, A, Equations 3.2.24) and 3.2.33) will be re-arranged to obtain the following:

$$A_\tau = 14^2\ \tau^2\ n_0\ (\ \sigma_\tau^2\ I\ T\ \epsilon\ \tau_L\ )^{-1}\ , \qquad 7.9.2a$$

$$A_v = (10^9)^2\ (dg^*)^2\ (\ \sigma_v^2\ n_0\ I\ T\ \epsilon\ \tau_L\ )^{-1}\ , \qquad 7.9.3a$$

where the subscripts for the area, A, indicate temperature and winds respectively. Inserting the previously found values for the quantities in the right-side of the equations, the following areas are obtained for the limiting emission rate determination, i.e., the 100 R zenith measurement for 10 minutes:

$$A_\tau = 14.3\ cm^2\quad (\ D = 4.3\ cm\ )\ , \qquad 7.9.2b$$

$$A_v = 11.7\ cm^2\quad (\ D = 3.9\ cm\ )\ , \qquad 7.9.3b$$

where D is the diameter. The size of the etalon required by the results given above is the smallest possible since unity transmission, i.e., no losses, has been assumed.

In a real experiment, two mirrors will be used to direct the light from arbitrary positions in the sky to the Fabry-Perot spectrometer and a dome will be needed to protect these mirrors from the elements. The etalon normally will be located inside a thermally stabilized vessel which will have at least one window, while the second window would most likely be the lens used to project the fringes onto the scanning aperture. When this vessel must be pressurized, a suitable pressure window should replace the lens. A field-lens is usually placed behind the scanning aperture to collimate the light for selection of the proper wavenumber by an interference filter, with the latter having a typical transmission of near 0.4. Behind this filter there is another lens whose purpose is to project all the light onto a detector, which in turn has been cooled below ambient to reduce its dark emission current. In order to achieve this, the detector must be insulated by a thermal window, which usually consists of a double-pane arrangement. At this point it should be noted that, although it is tempting to remove the two lenses behind the aperture, they do serve two useful purposes. The first lens collimates the light such that the interference filter operates at its most efficient point, as discussed in Chapter 2, Section 5.2, while the second lens not only collects the light for the detector, but also is used to defocus the source and fringe images on the photodetector. This defocusing will remove the effects of both local inhomogeneities in the source and in the quantum efficiency of the detector. Last, for simplicity, it is assumed that the two sky mirrors will reflect 0.96 of the light impinging upon them.

The above enumeration simply shows there exist about 22 surfaces which transmit (or reflect) light, and this count includes the two backside surfaces of the etalon flats. When, for the sake of simplicity, it is assumed that all the transmitting surfaces are uncoated glass, each of these surfaces will have a reflectivity of 0.04, and the light reflected by them is considered to be lost forever. By this assumption, the problem of ghosts, described earlier, is being ignored; however, this is not the place to deal with such detailed information, and the reader is referred to the earlier section on this topic. With the knowledge of the filter transmission and the number of reflecting/transmitting surfaces in the spectrometer, it is now possible to calculate the transmission term τ_L :

$$\tau_L = (0.96)^{22} \times 0.4 = 0.16, \qquad 7.9.4$$

or the minimum etalon area must be increased about six-fold, i.e.,:

$$A_\tau = 87.6 \text{ cm}^2 \quad (D = 10.6 \text{ cm}), \qquad 7.9.2c$$

$$A_v = 72.0 \text{ cm}^2 \quad (D = 9.6 \text{ cm}). \qquad 7.9.3c$$

Note the large increase in area caused by reflections by the uncoated surfaces, which should serve as an indication of the usefulness of having anti-reflection coatings on as many surfaces as possible.

The area found in Equation 7.9.2c) is the clear aperture of the etalon, which does not include obstructions by such as the etalon adjustment mechanism parts, spacer material, etalon support fingers and holders, self-aligning devices, etc. Since etalon flats are available commercially in 2.5 cm diameter increments, a pair of flats with 12.5 cm diameter would normally satisfy the requirements for the minimum clear aperture set above in Equation 7.9.2c). The required clear aperture found in this equation is that aperture for an ideal defect-free etalon with a 0.80 reflectivity mirror coating; that is, with a finesse N_R , as defined in Equation 2.1.13a), of about 14. Near-ideal behavior for the etalon is obtained when the surface defect finesse is about four times the reflective finesse. Thus, a surface finesse of about 50, corresponding to a flatness of $\lambda/100$ for spherical curvature defects [defined in Equation 2.3.5)], will satisfy the near-ideal etalon requirements.

The previous calculations have implicitly assumed the etalon will behave as an ideal etalón of infinite physical extent. This assumption can be tested with Equation 5.3.14) and Figures 5.23 through 5.25. From the equation it is found that k , or the etalon effective-size, is equal to 1240, which, as seen in the figures, does indeed give near-ideal etalon behavior. In other exercises, when the source irradiance is large, the calculated etalon area may be small enough so that the effective-size considerations just discussed are important.

Similar calculations illustrate that, using the equal-noise measurement method of Chapter 3, Section 2.2, for the same etalon area as found in Equation 7.9.2c), a measurement time of about 20 minutes is required to obtain the same precision of measurement as the equal-time method used earlier. Although the loss of efficiency is nearly a factor of 2, the equal-noise method would deliver the specified precision, even though the emission rate of the source may be fluctuating widely.

The spherical etalon has not been considered here, since the etalon spacer is too small to satisfy the requirements of Equations 5.2.25), 5.2.48) through 5.2.51) and 7.9.2c). For higher-resolution measurements, where etalon spacings greater than about 7 cm are necessary, the spherical etalon becomes competitive, as discussed in Chapter 5, Section 2.

At this point is is useful to compare the single-aperture Jacquinot and Dufour (1948) spectrometer with a Fabry-Perot spectrometer using a multiple-anode device. Since, for optimum operation, the single-aperture covers about 0.13 of an order, i.e., $2 \times f^*$, a multiple anode device can, at best, collect 7.69 times more light per order. As can be seen from Equations 3.2.24) and 3.2.33), the variance of determination is inversely proportional to the irradiance, and, since it is possible to consider the presence of about 8 anodes per order as being equivalent to increasing the irradiance by that value, then the standard deviation of determination will be decreased by the one-half power of the light increase, or 2.77. Thus, using the change in the standard deviation as a measure of the change in efficiency of measurement, a device which

will measure a full order will have a gain of 2.77 over the single-aperture spectrometer. Note that the use of multiple-aperture masks, such as that of Sipler and Biondi (1978) given in Figure 7.13, have a gain in efficiency also given by the one-half power of the number of apertures used. Returning to the multiple-anode-device comparison, it was found that about 8 such anodes could be fitted in one order, if they were to be of the optimum size. However, 14 samples are required for the unambiguous description of the measured profile, thus the size of each effective anode must be made smaller than the optimum in order to satisfy this requirement. The new effective aperture size is now less than optimum, thus increasing the error of determination as given in Equations 3.2.24), 3.2.33) and Figures 3.2 through 3.5. By decreasing the aperture size it is found also that the number of coefficients has increased, as well as having changed values for the parameters a^* and dg^*. Inspection of Figure 3.3 shows that the uncertainty therefore will be increased by a factor of about 1.5 in the variance, that is, with a multiple-anode device there is a gain of about 2.26 per order in the standard deviation of determination. This gain can also expressed as a decrease in the diameter of the aperture of an etalon to obtain an arbitrary uncertainty of determination when using a multiple-anode device, rather than a single aperture spectrometer. For the exercise of the night sky measurements used previously, the clear area of the etalon would be reduced from 88.1 cm^2 to 17.2 cm^2, while the diameter is reduced from 10.6 cm to 4.7 cm. Assuming the same degree of obstruction exists for both cases, then an aperture diameter of 6.6 cm would be the minimum aperture diameter that could be used, which represents a sizeable saving in the cost of the etalon flats. This saving must be tempered by the increase in cost and complexity associated with a multiple-anode device and its electronic instrumentation.

Chapter 8

Non-classical Fabry-Perot devices

In the previous chapters, conventional Fabry-Perot interferometers have been discussed in some detail. Other systems, where Fabry-Perot devices are used in combination with other dispersing devices, have been touched upon lightly, but unconventional usage of Fabry-Perot devices has not been discussed to any extent.

1. Fabry-Perot etalons and insect-eye lenses

Insect-eye lenses, i.e., a collection of small-diameter short focal length lenses in a grid (usually monolithic), have been used by Courtès and collaborators (Courtès *et al.*, 1966; Courtès and Georgelin, 1967; Georgelin, 1970a; Monnet, 1970) for imaging applications, mostly astronomical, where conventional fringe imaging on an object gives too sparse a record because of the wide separation between fringes. The use of these insect-eye lenses gives a number of separate fringe images superimposed on the sky object(s), when the foreoptics are properly arranged for imaging purposes (Meaburn, 1976). In effect, the use of these multiple lenses divides the etalon into a number of small discrete etalons, such that each small etalon has its own corresponding object image.

As has been discussed in Chapter 5, Section 3.1, the use of small-effective-size etalons leads to the degradation of the etalon properties, relative to an ideal etalon.